avenlur

Outdoor Koa by Avenlur

⚠ WARNING:

Adult assembly required.

Need Help?

CALL US AT 888.697.3931 / M-F 9AM - 5PM PT (12PM - -8PM ET)

OR EMAIL US AT INFO@AVENLUR.COM

PLEASE READ THIS BEFORE STARTING ASSEMBLY

PLEASE RETAIN THESE INSTRUCTIONS FOR FUTURE REFERENCE. KEEP THEM IN A SAFE PLACE, WHERE YOU CAN REFER TO THEM AS NEEDED. IN ORDER TO PROVIDE YOU WITH THE MOST EFFICIENT SERVICE, IT IS REQUIRED THAT YOU PROVIDE US WITH THE PART NUMBERS WHEN ORDERING PARTS.

PLEASE HAVE THE FOLLOWING INFORMATION WHEN YOU MAKE YOUR CALL:
1-YOUR ORDER NUMBER
2-DESCRIPTION OF THE PART FROM THE PARTS LIST AND THE PART NUMBER
3-CONTACT US AT: **AVENLUR- 888-697-3931**

READ THE ASSEMBLY MANUAL COMPLETELY, PAYING SPECIAL ATTENTION TO THE IMPORTANT TIPS AND SAFETY INFORMATION. WE ENCOURAGE OUR CUSTOMERS TO HIRE PROFESSIONAL HELP FOR INSTALLING THIS PLAYSET.

SEPARATE AND IDENTIFY ALL PARTS TO MAKE SURE THAT YOU HAVE ALL OF THE PARTS LISTED. IF YOU CAN'T FIND ALL OF THE PARTS, CHECK THE PACKING MATERIAL. SMALL PARTS MAY HAVE FALLEN OUT OF THE PACKET AND INTO THE MAIN BOX DURING TRANSIT.

PLEASE HAVE AN ELECTRIC SCREWDRIVER AVAILABLE FOR ASSEMBLY.

PLEASE NOTE: THE WOOD IS TREATED WITH ANTI-CORROSIVE TREATMENT WHICH MAY RESULT IN VERY SMALL CRACKS OR ROUGH SURFACES IN AREAS. THIS IS VERY NORMAL AND STANDARD. THIS WILL NOT AFFECT THE SAFETY AND STABILITY OF THE WOOD AND THE SWINGSET.

Equipment is recommended for use by **ages 1 and older.** Our products are solid and strong and have been used in business, commercial and school settings. However, our warranty only covers use in residential settings.

Please follow all recommendations below. **Failure to do so may result in the warranty being void and/or safety violations that could result in serious injury.** This manual contains helpful information concerning Assembly Preparation, installation Procedure, and Required Maintenance Always keep the safety of your children in mind as your play structure is being built and as your children play on the set. Before your children play on the set please review the Operation Instructions with them to help ensure their safety.

⚠WARNING:

Children must NOT use this playcenter until the unit has been completely assembled and inspected by an adult to ensure the set has been properly installed, leveled and anchored.

⚠WARNING:

This Symbol points out important safety instructions which, if not followed, could endanger the personal safety of yourself and your children and/or damage your property. You MUST read and follow all instructions in this manual before attempting to use this playcenter.

⚠WARNING:

CONTINUOUS ADULT SUPERVISION REQUIRED!

⚠WARNING:

STRANGULATION HAZARDS

1. Never allow children to play with ropes, clotheslines, pet leashes, cables, chains or cord-like items when using this playcenter or to attach items to playcenter.
2. Never allow children to wear loose fitting clothing, ponchos, hoods, scarves, capes,

necklaces or items with draw-strings, cords or ties when using this playcenter.
3. Failure to prohibit these items increases the risk of serious injury and death to children from entanglement and strangulation.

⚠WARNING:

SERIOUS HEAD INJURY HAZARD

Maintaining shock absorbing materials under and around the playcenter as recommended in the installation & operation instructions, installation over concrete, asphalt, carpet and other hard surfaces creates a risk of serious injury or death from falls to the ground.

Positioning Your Playcenter

1. The playcenter is designed to be installed on a level surface by an Adult with an Adult helper. Place in a flat area of your yard to minimize ground preparation.
2. Choose a leveled location for the equipment, this can reduce the likelihood of the play set tipping over and loose-fill surfacing material washing away during heavy rains.
3. It is a good idea to place your playcenter in an area that is convenient for adults to watch children at play.
4. Create a site free of obstacles that could cause injuries- such as low overhanging tree branches, overhead wires, tree stumps and/or roots, large rocks, bricks and concrete. Additional suggestions in the Suggested Playground Surfacing Section.

Maintenance Instructions:

General Maintenance:

1. Check the wood and hardware every two weeks due to wood expansion and contraction. It is particularly important that this procedure be followed at the beginning of each season.
2. Inspect wood parts monthly. The grain of the wood sometimes will lift in the dry season causing splinters to appear. Light sand may be necessary to maintain a safe playing environment. Treat your playcenter with stain regularly, to help prevent severe checking/splitting and other weather damage.
3. A waterborne ultra violet and water repellent stain has been applied to your playcenter. This is temporary. Once or twice a year, depending on your climate conditions, you must apply some type of protection (sealant) to the wood of your unit. Prior to the application of sealant, lightly sand any “rough” spots on your playcenter. Please note this is a requirement of your warranty.
4. Assembling and maintaining the playcenter on a level location is very important. As your children play, your playcenter will slowly dig its way into the soil, and it is very important that it settles evenly. Make sure the playcenter is level and true one each year or at the beginning of each play season.

At the beginning of each play season:

1. Tighten all hardware.
2. Lubricate all metallic moving parts per manufacturer's instructions.
3. Check all wood members for deterioration and splinters. Sand down splinters use a sealant on deteriorating wood parts.
4. Rake and check depth of loose fill protective surfacing materials to prevent compaction and to maintain appropriate depth. Replace as necessary.

Twice a month during play season:

1. Tighten all hardware.
2. Rake and check depth of loose fill protective surfacing materials to prevent compaction and to maintain appropriate depth. Replace as necessary.

Disposal Instructions:

When the Playcenter use is no longer desired, it should be disassembled and disposed of in such a way that no unreasonable hazards will exist at the time the unit is discarded.

What causes weathering? Does it affect the strength of my product?

One of the main reasons for weathering is the effects of water (moisture); the moisture content of the wood at the surface is different from the interior of the wood. As the climate changes, moisture moves in or out of the wood, causing tension which can result in checking and or warping. You can expect the following due to weathering. These changes will not affect the strength of the product:

1. **Checking** is surface cracks in the wood along the grain. A post (4"x 4") will experience more checking than a board (1"x4") because the surface and interior moisture content will vary more widely than in thinner wood.

2. **Warping** results from any distortion (twisting, cupping) from the original plane of the board and often happens from rapid wetting and drying of the wood.

3. **Fading** happens as a natural change in the wood color as it is exposed to sun-light and will turn gray over time.

How can I reduce the amount of weathering to wood products?

1. Your wood product is coated with a water based wood sealer which contains water repellent and an Ultraviolet stabilizer. Sunlight will break down the coating, so we recommend applying a water repellent or stain on a yearly basis (see your local stain and paint supplier for a recommended product). You must apply some type of protection (sealant) to the wood of your product. Please note this is a requirement of your warranty. Most weathering is just the normal result of nature and will not affect safety. However if you are concerned that a part has experienced a severe weathering problem please call our customer service department for further assistance.

2. Inspect wood parts monthly. The grain of the wood sometimes will lift in the dry season causing splinters to appear. Light sanding may be necessary to maintain a safe environment. Treating your Product with protection (sealant) after sanding will help prevent severe checking/ splitting and other weather damage.

3. During inclement weather, store the playset, or bring it inside. This set is not designed to stay outdoors year-round. However, If you inspect and treat the wood regularly, it will last much longer. Mold, rot, cracks, splinters, and fading are not covered under warranty.

1 ×1 49.5in

2 ×1 49.5in

3 ×1 49.5in

4 ×1 49.5in

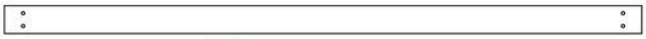

5 ×2 47in

6 ×2 47in

7 ×1 47in

8 ×1 47in

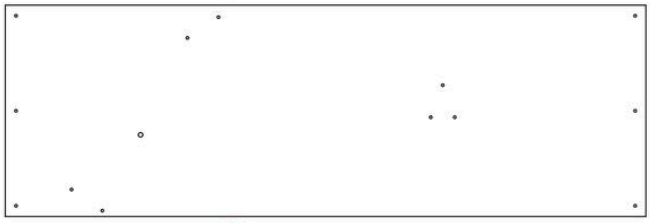

9 ×1 47in

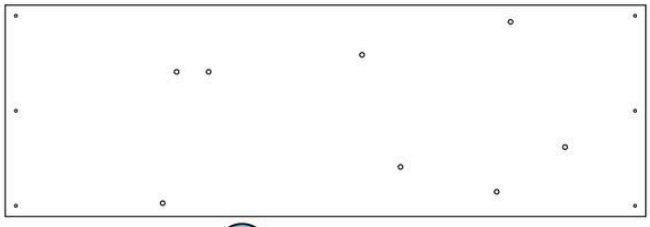

10 ×1 47in

11 ×1 47.5in

12 ×2 46.5in

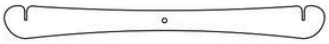

13 ×1 23.5in

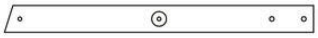

14 ×2 22.5in

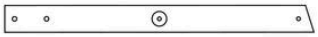

15 ×2 22.5in

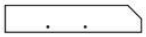

16 ×1 10in

17 ×1

18 ×1

19 ×1

20 ×1

21 ×1

22 ×1 10in

23 ×1 4.5in

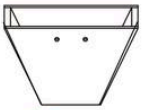

24 ×1

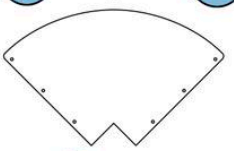

25 ×2

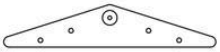

26 ×2 15.5in

27 ×1 3.5in

28 ×2

29 ×2

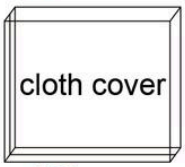

30 ×1

M5×45
A ×63

M7×40
B ×10

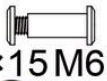

M6×15 M6×20
C ×2

M6×20 M6×20
D ×8

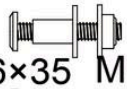

M6×35 M6
E ×5

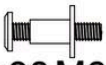

M6×30 M6×15
F ×1

M6×95 M6
G ×2

4mm
H ×2

10mm
I ×1

M6
J ×7

01-1

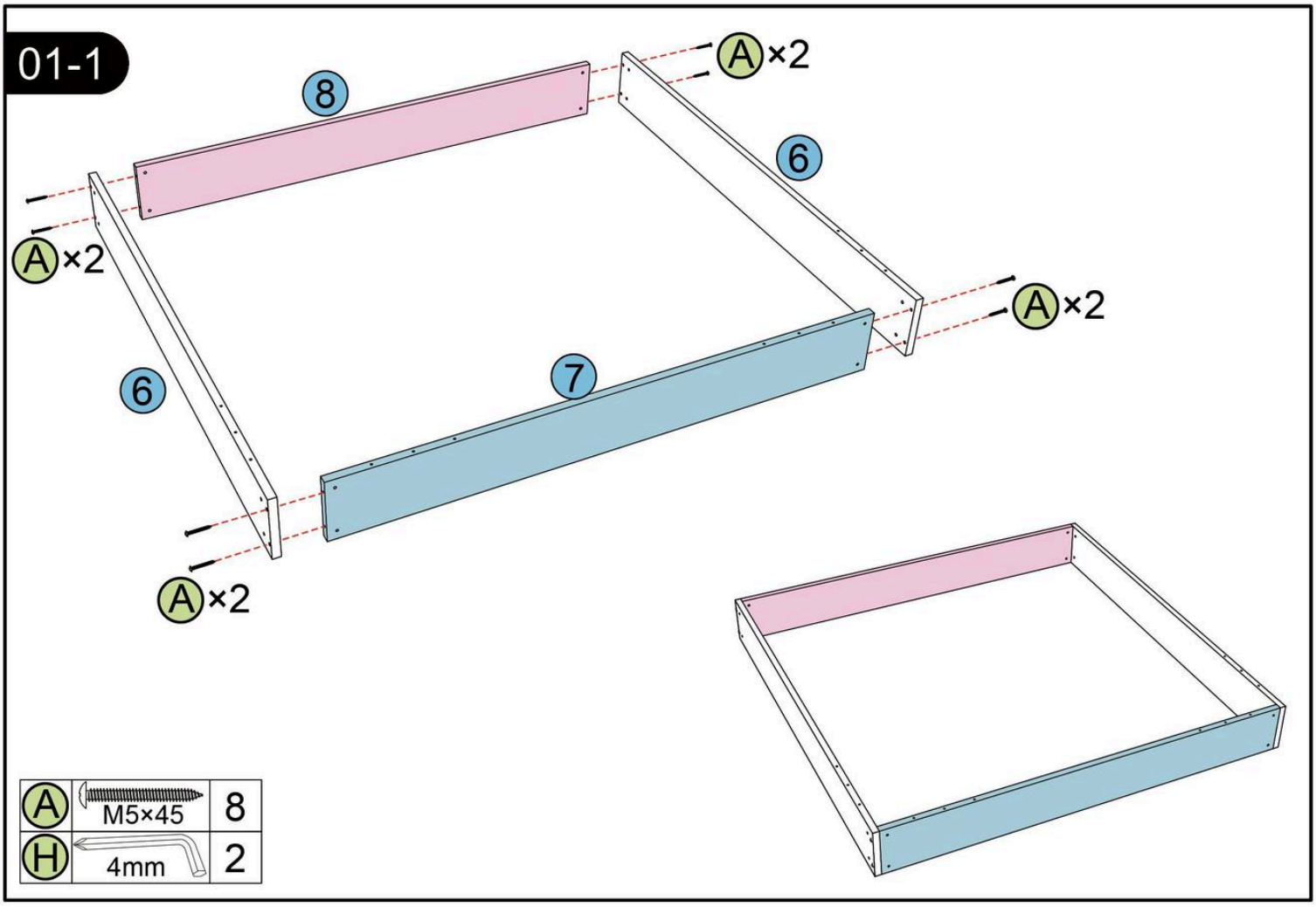

A	M5×45	8
H	4mm	2

01-2

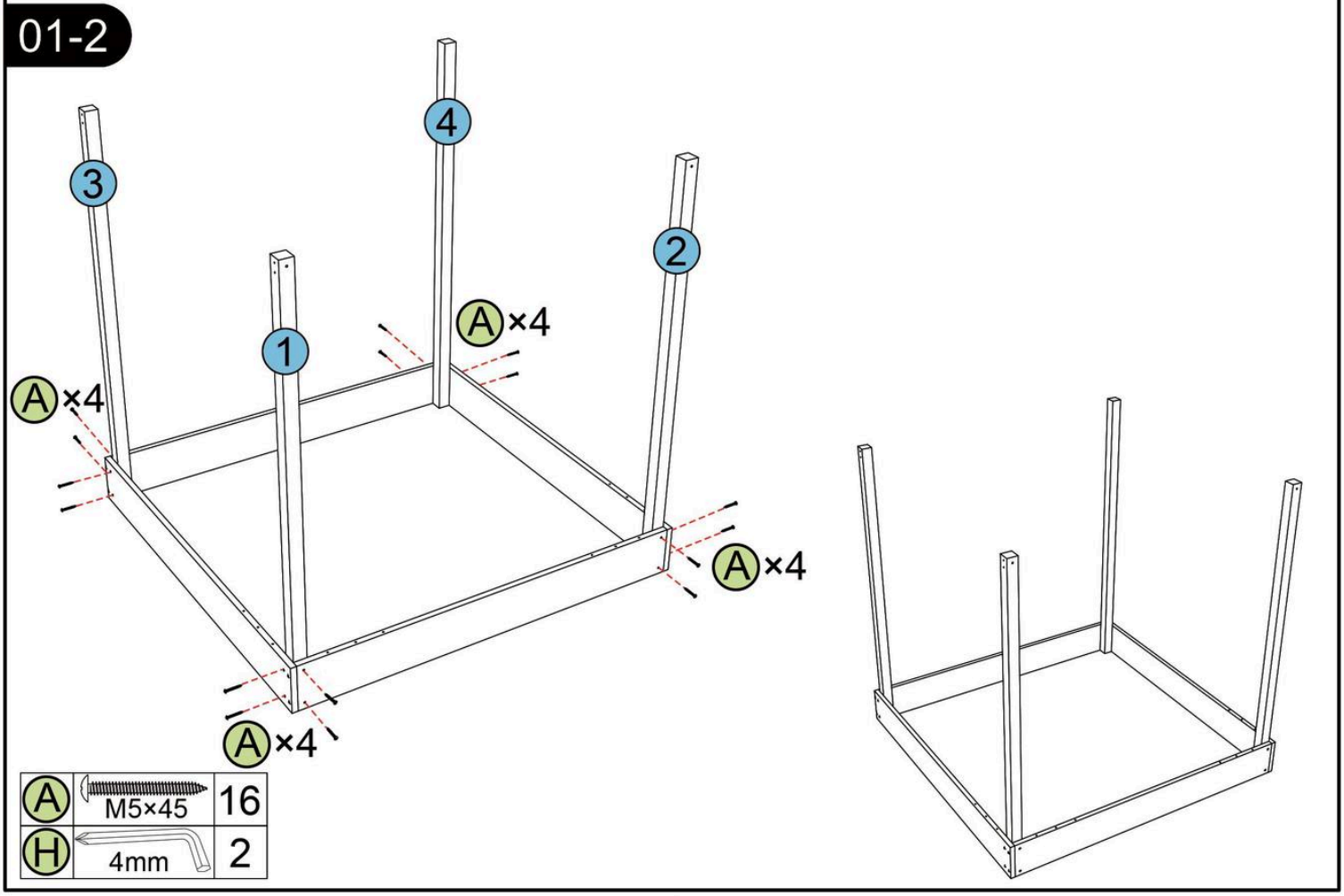

A	M5×45	16
H	4mm	2

02-1

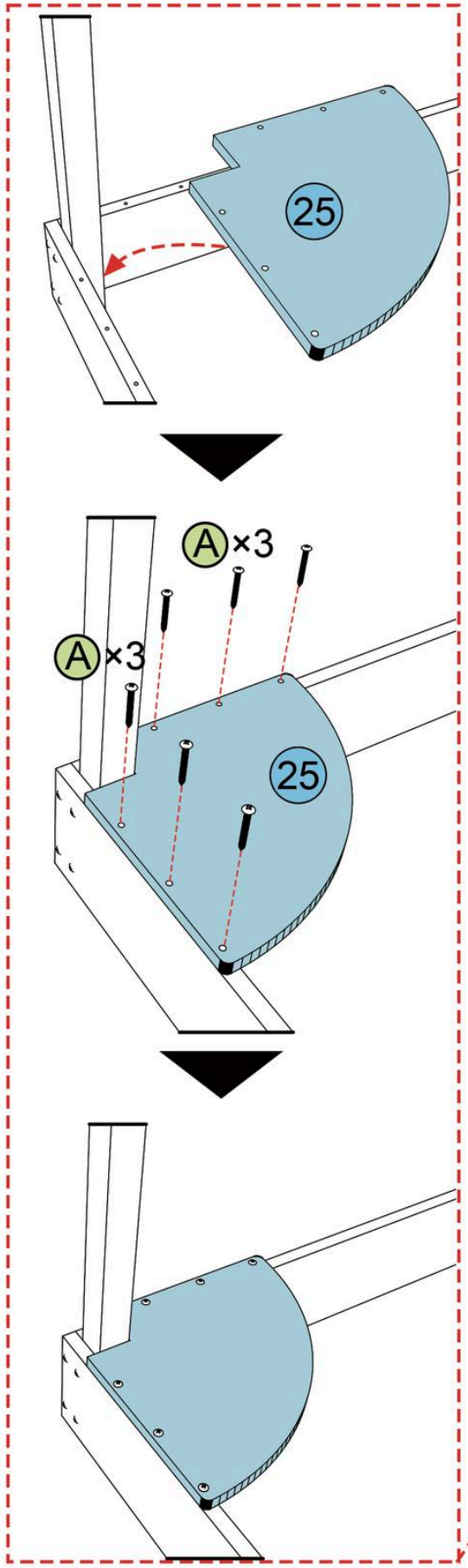

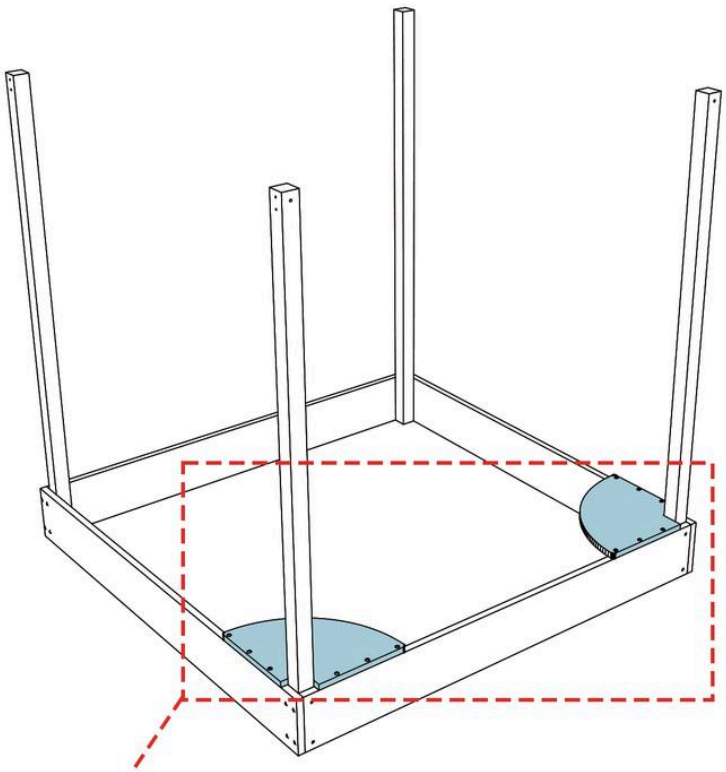

A	M5×45	12
H	4mm	2

03-1

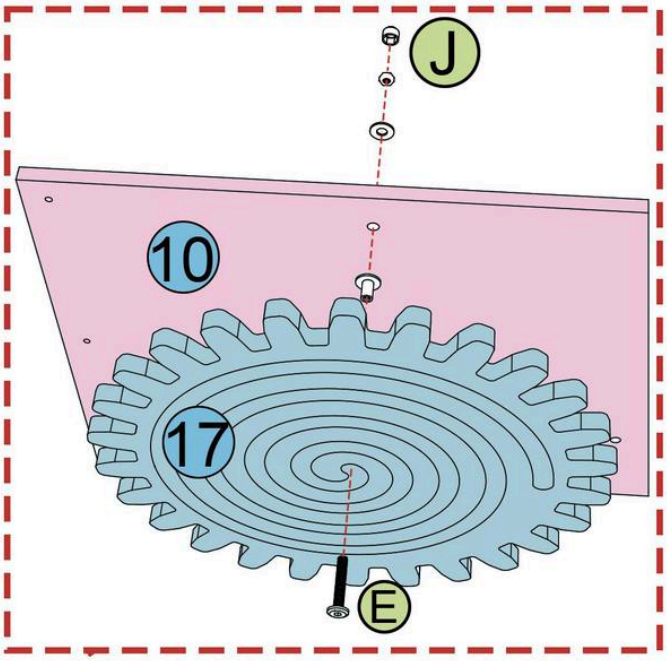

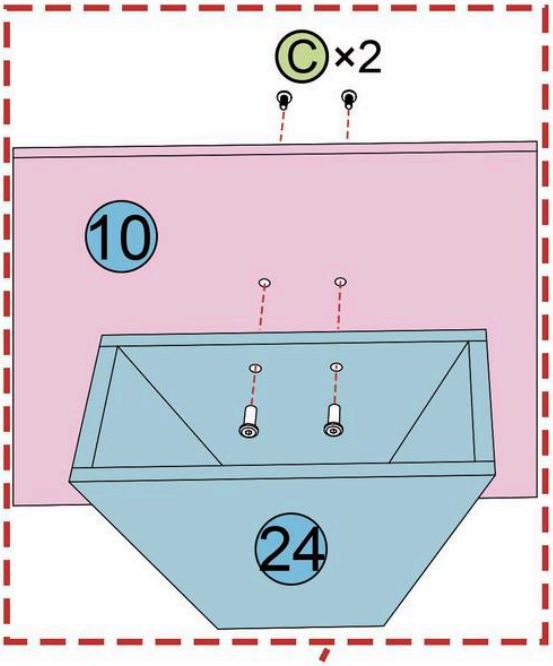

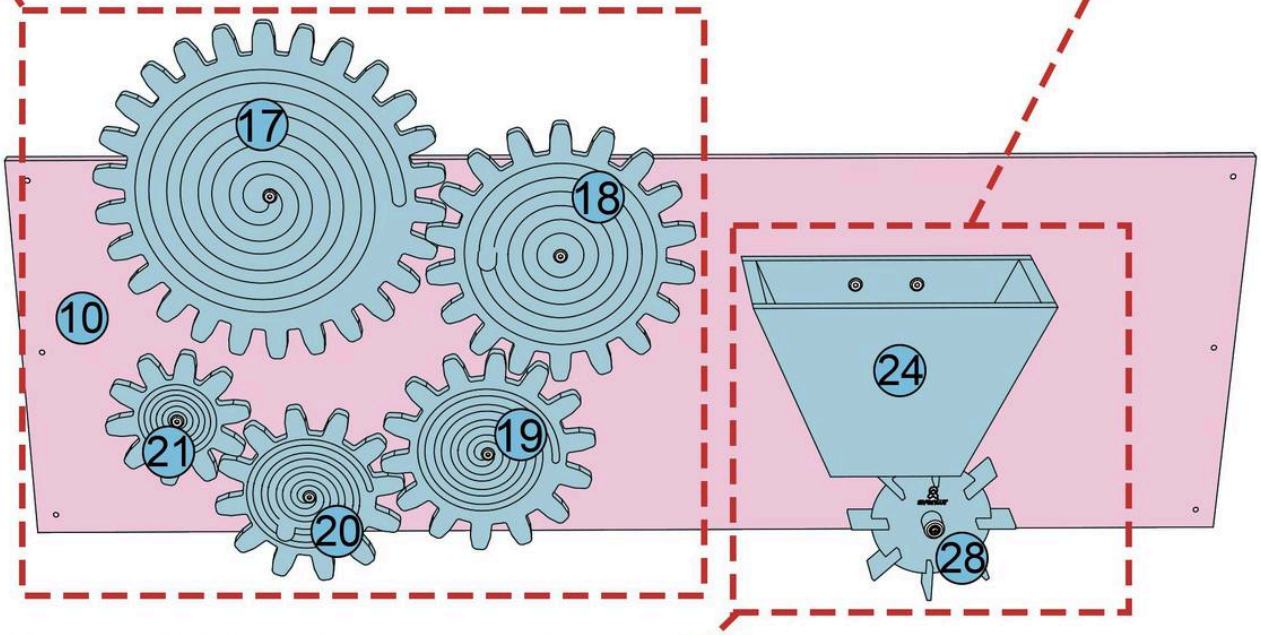

Note: Do not tighten the screws G too much, or the waterwheel will not turn properly.

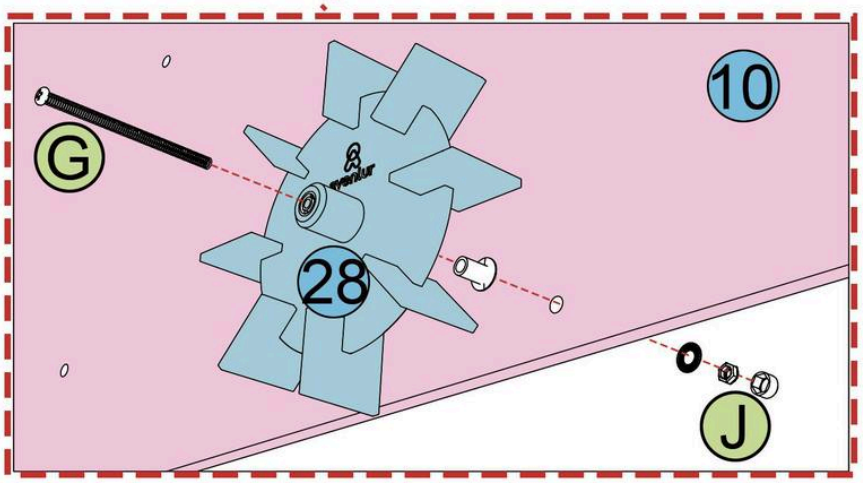

E	M6×35 M6	5
C	M6×15 M6×20	2
G	M6×95 M6	1
J	M6	6
H	4mm	2
I	10mm	1

04-1

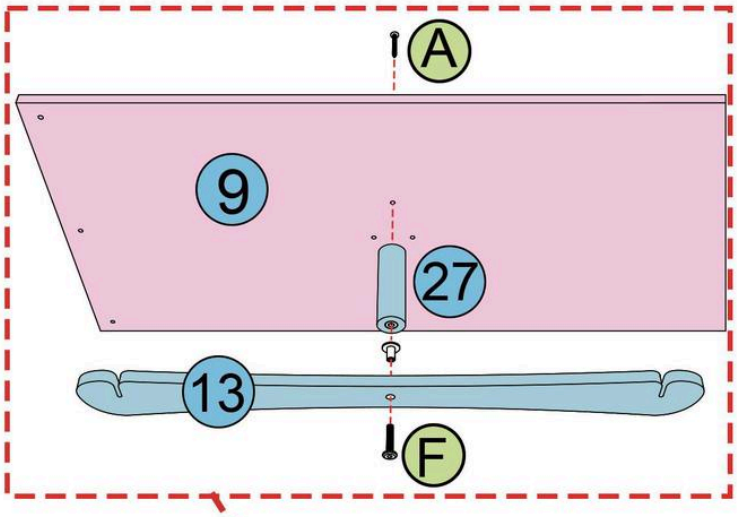

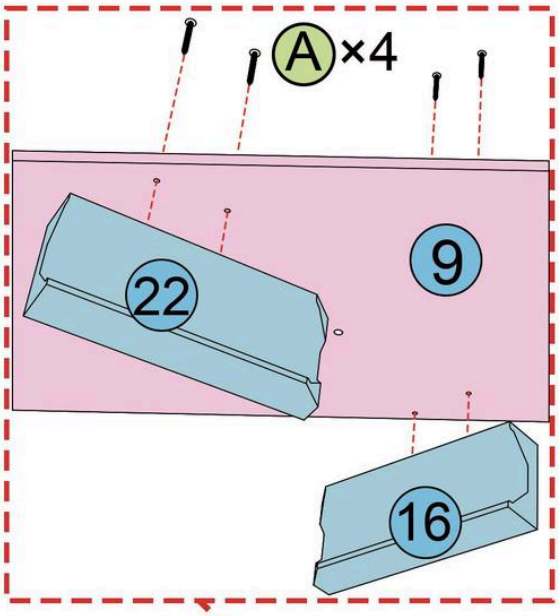

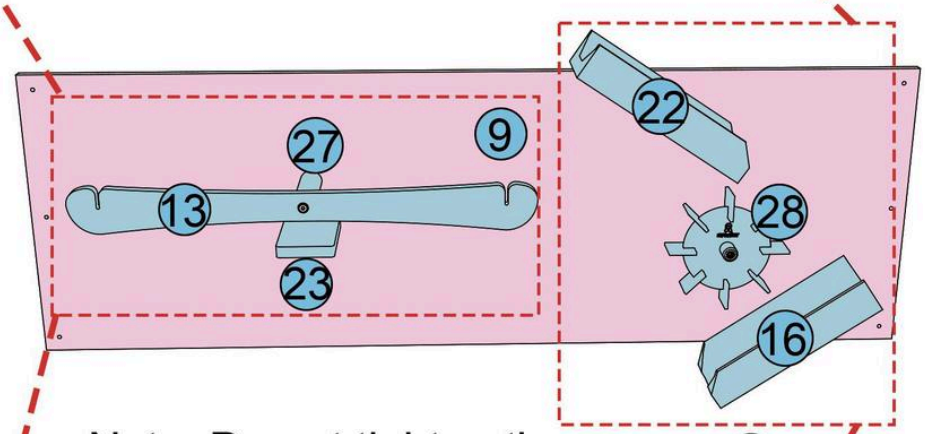

Note: Do not tighten the screws G too much, or the waterwheel will not turn properly.

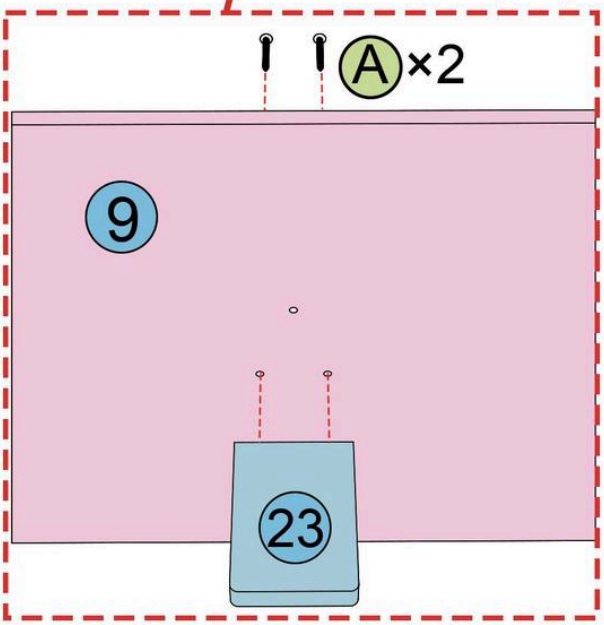

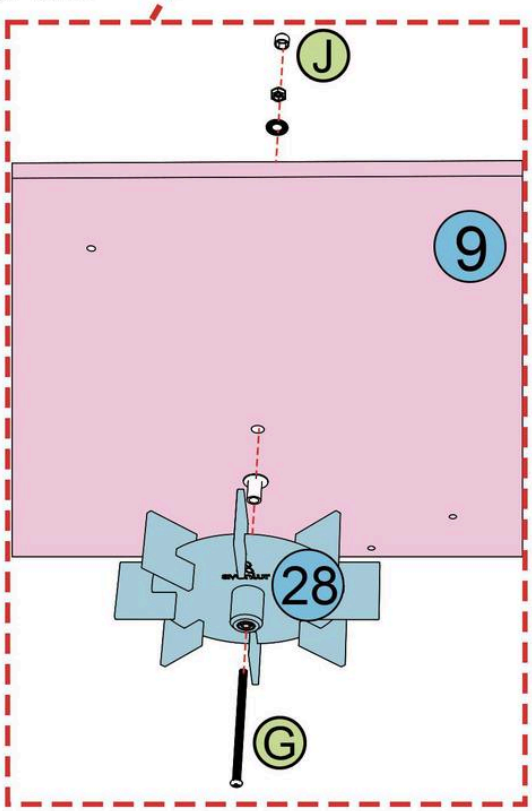

A	M5×45	7	J	M6	1
G	M6×95 M6	1	H	4mm	2
F	M6×30 M6×15	1	I	10mm	1

05-1

When installing, first screw on the screws, then fully tighten all screws.

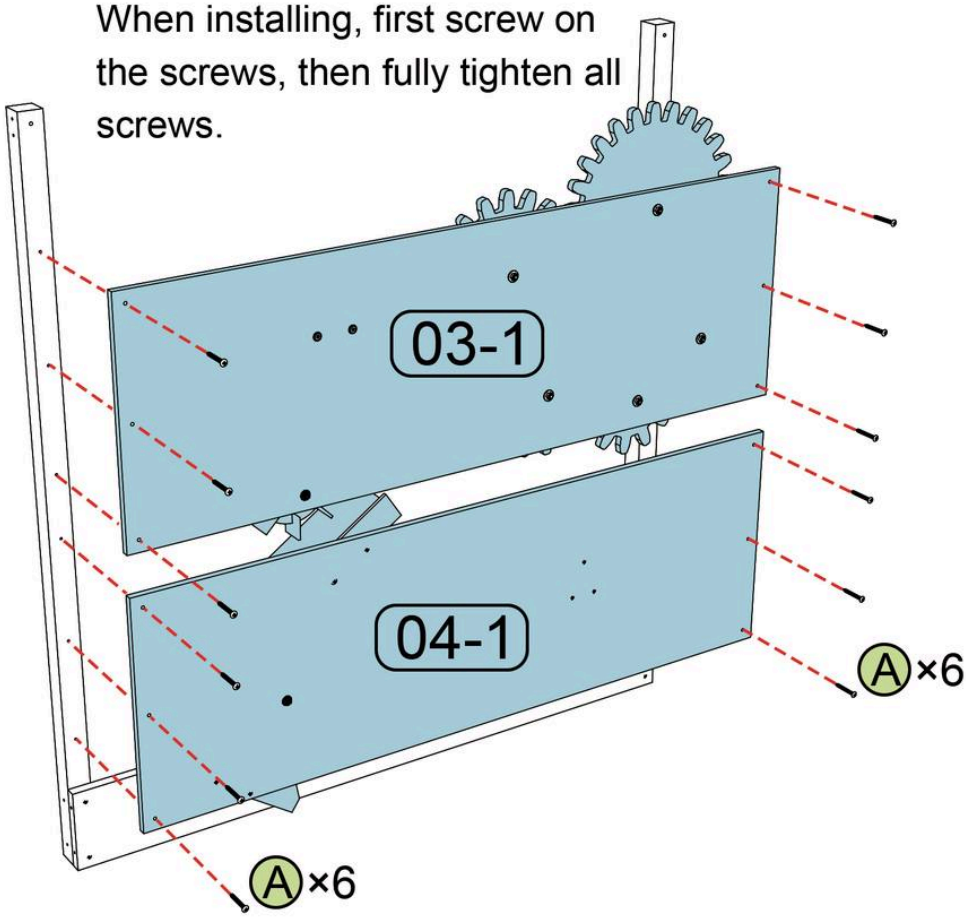

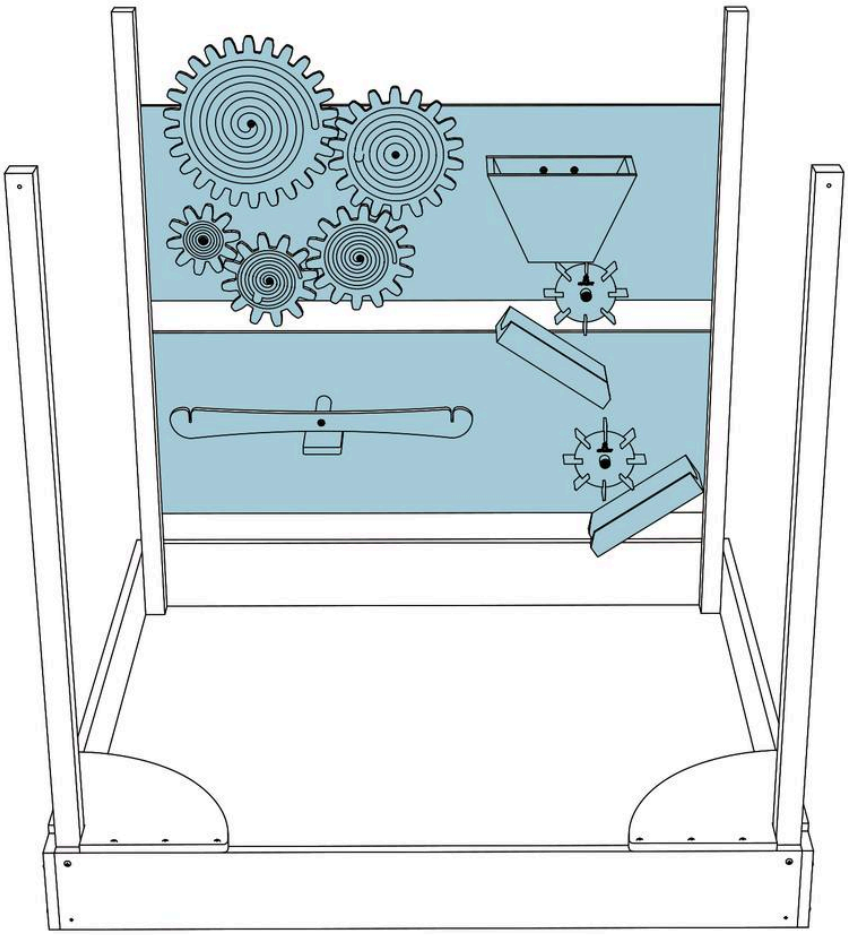

A	M5×45	12
H	4mm	2

06-1

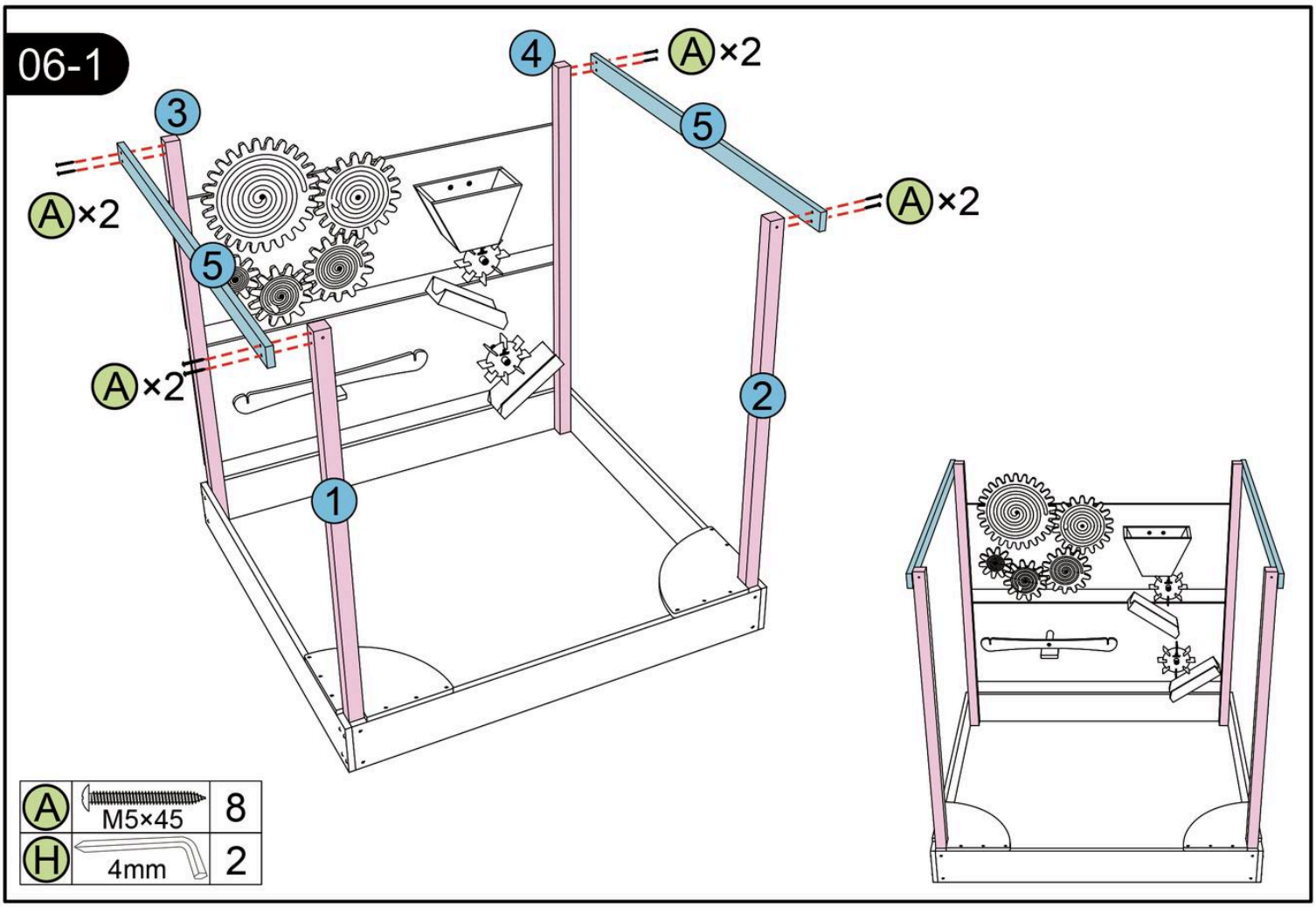

A	M5×45	8
H	4mm	2

06-2

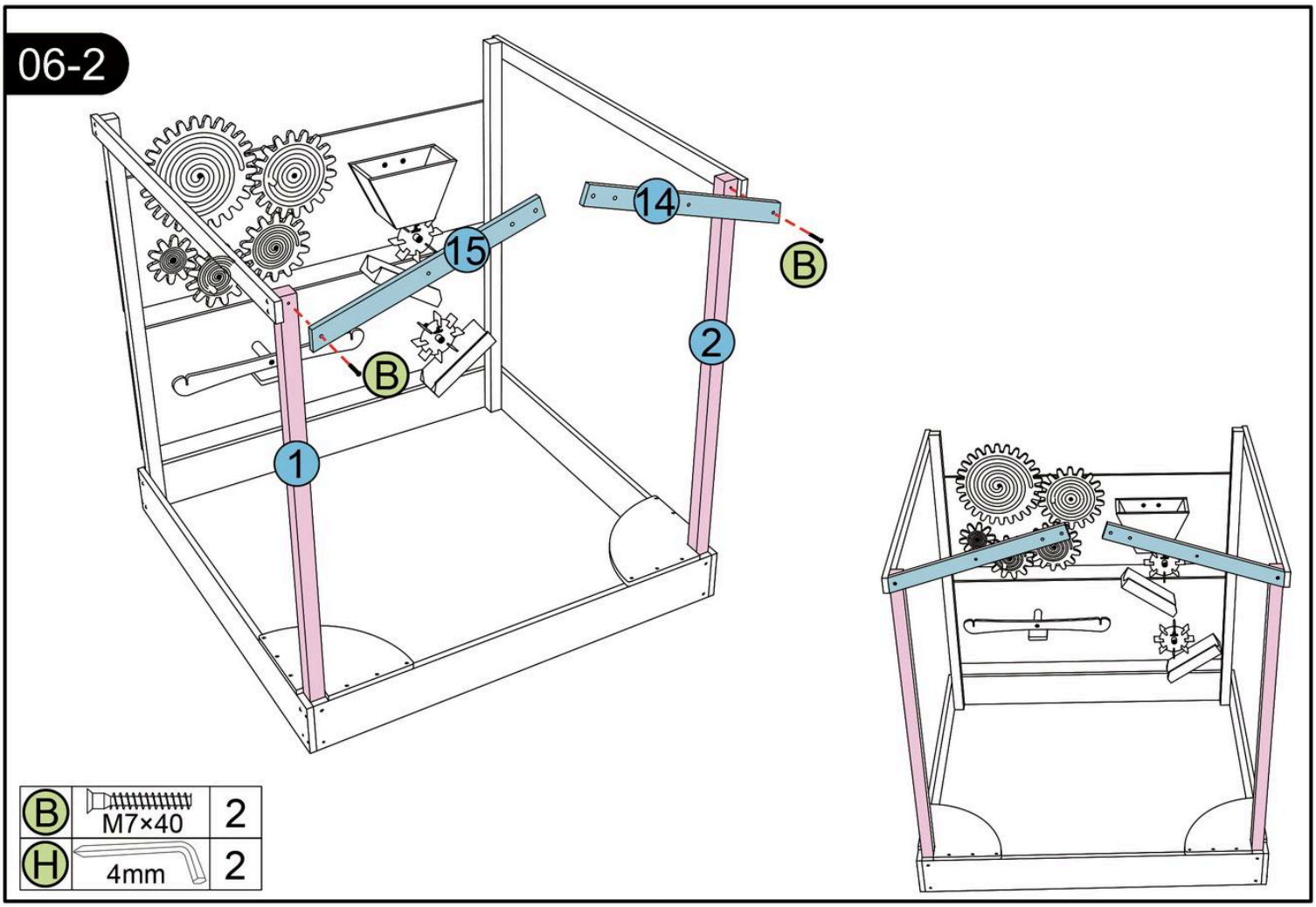

B	M7×40	2
H	4mm	2

07-1

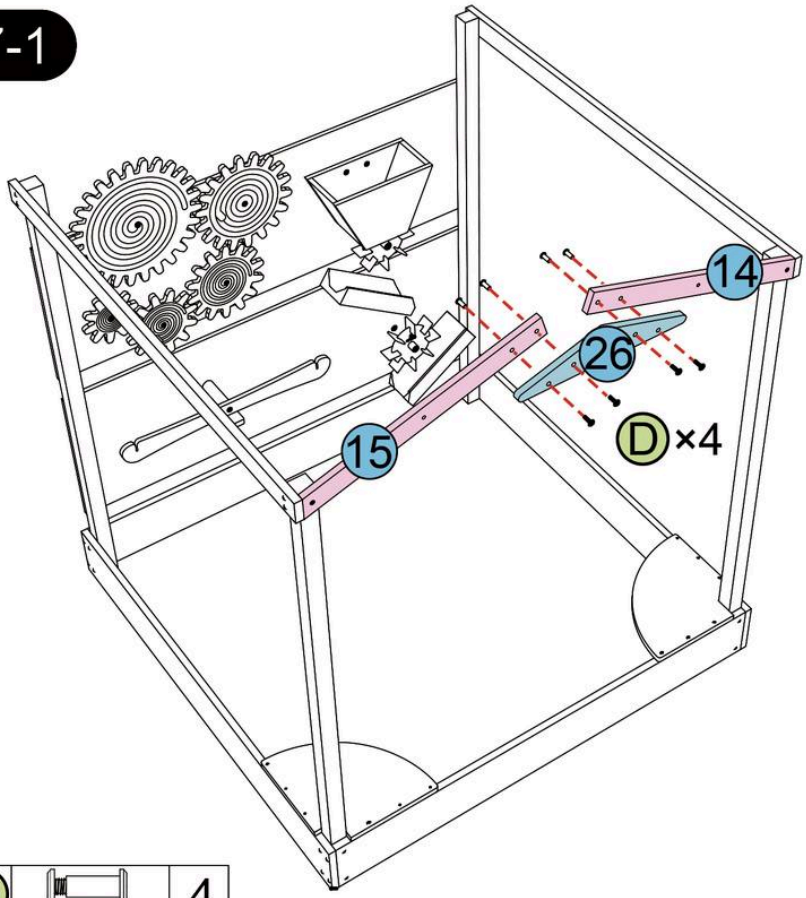

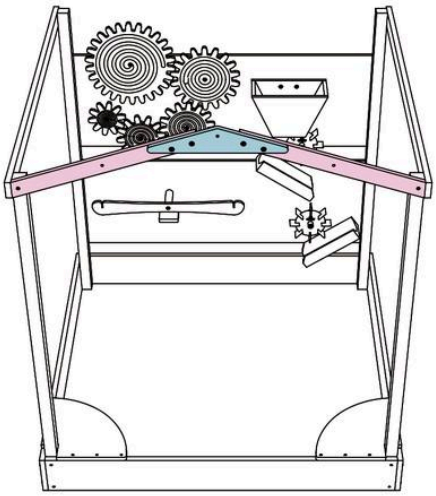

D	M6×20 M6×20	4
H	4mm	2

07-2

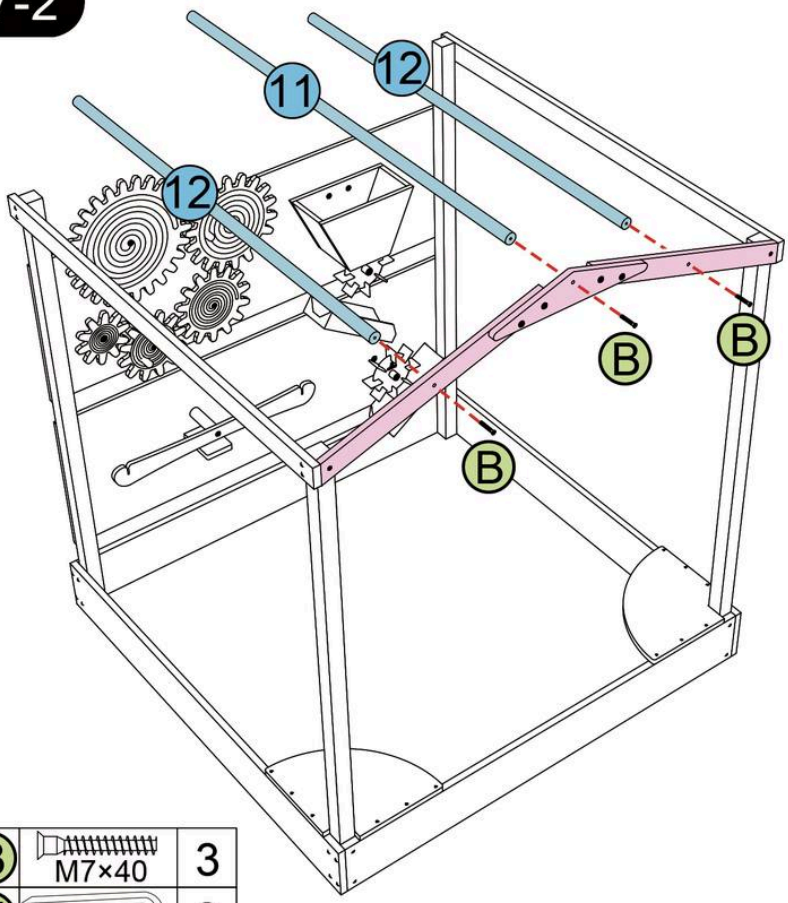

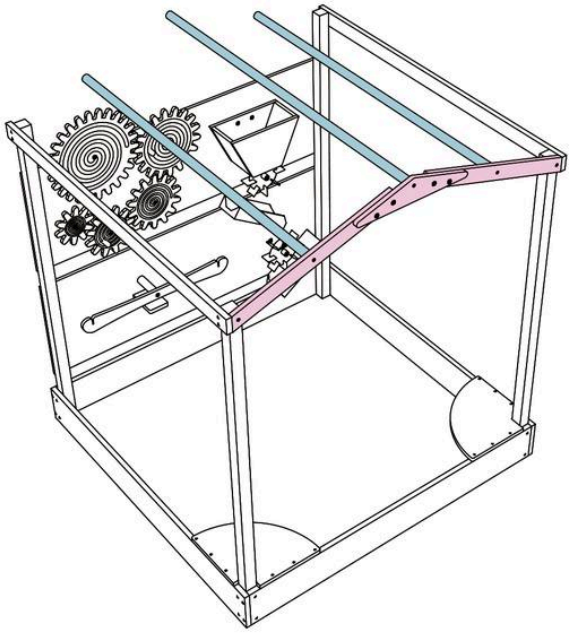

B	M7×40	3
H	4mm	2

08-1

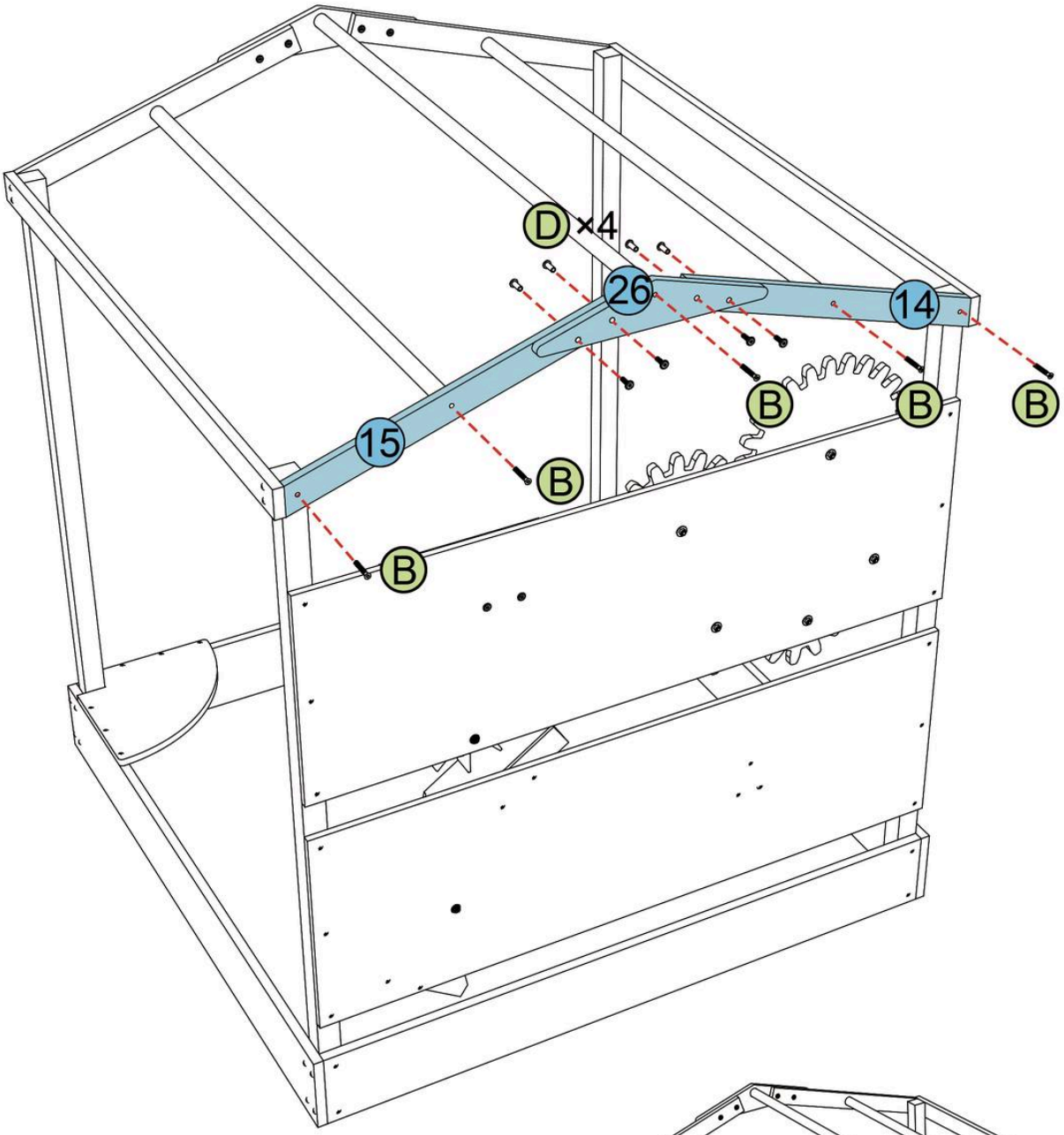

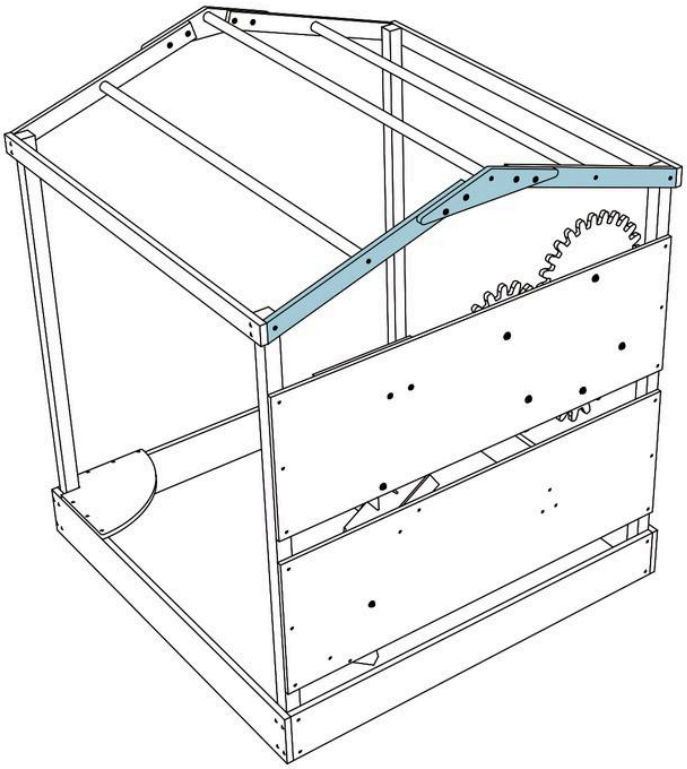

D	M6×20 M6×20	4
B	M7×40	5
H	4mm	2

09-1

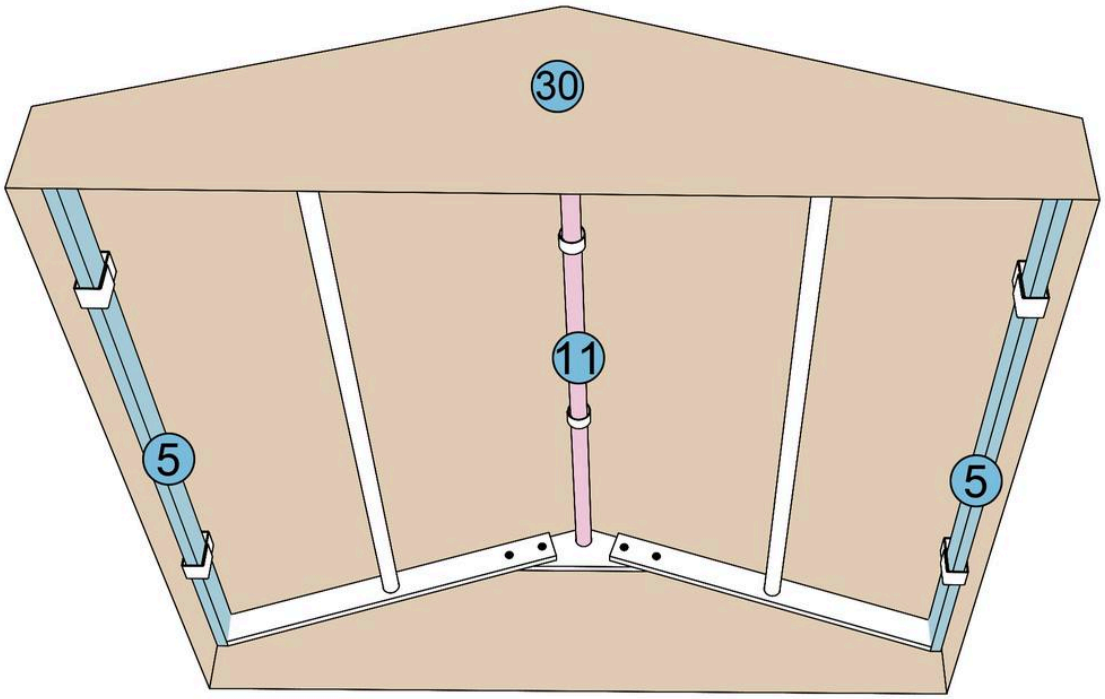

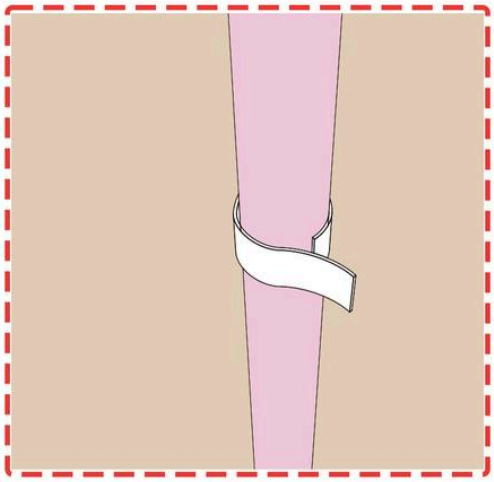

Note: Unfold the tent fabric part 30 and fix it onto part 5 and parts 11 with the Velcro.

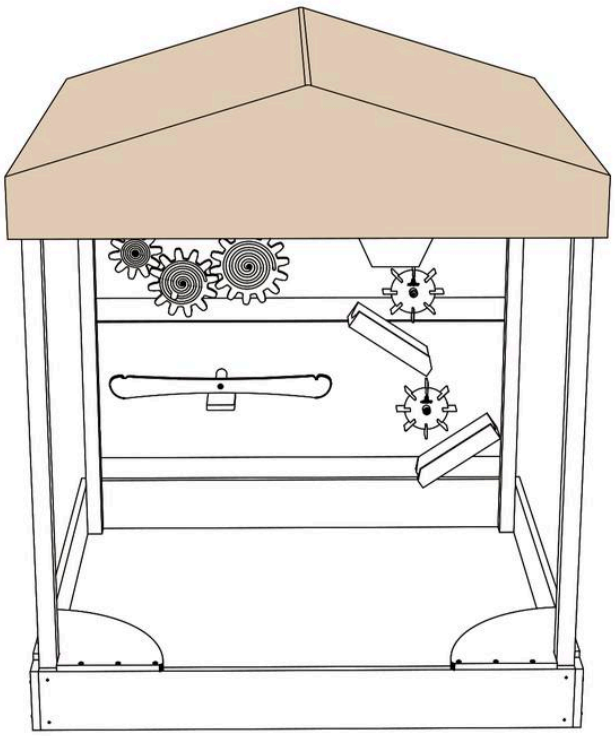

10-1

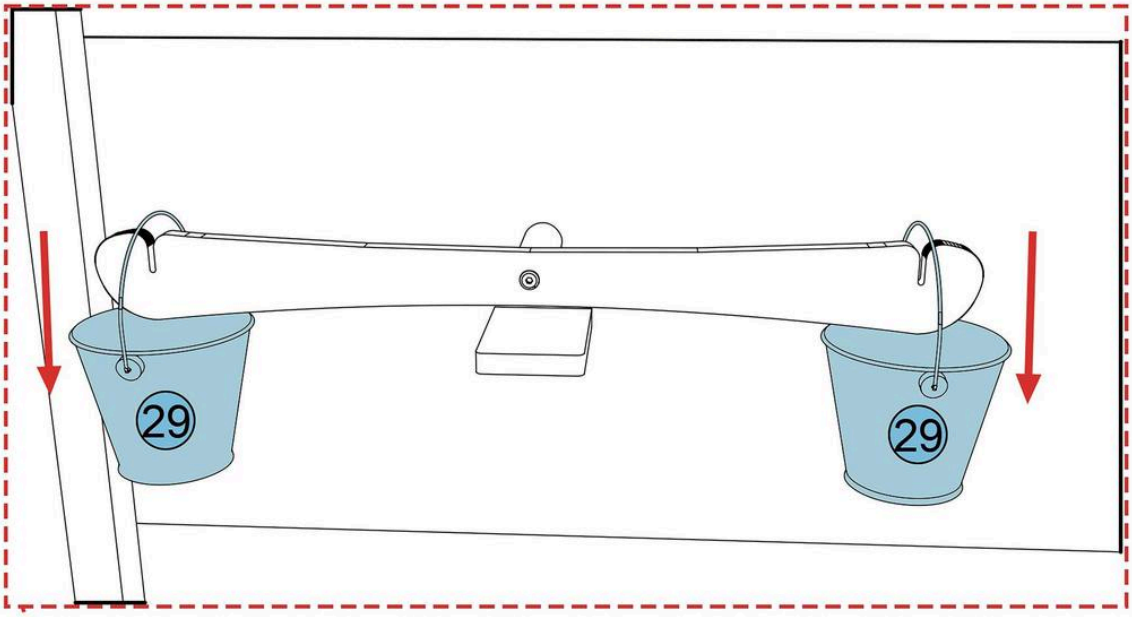

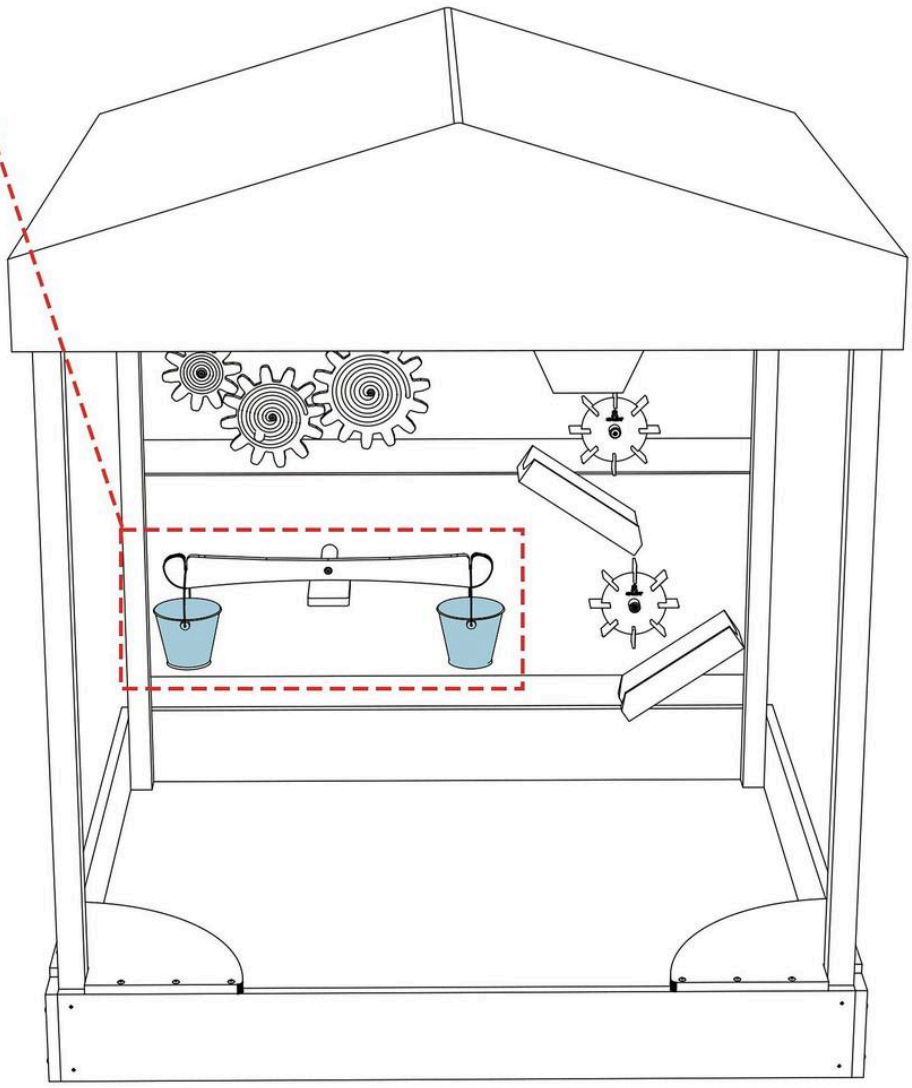

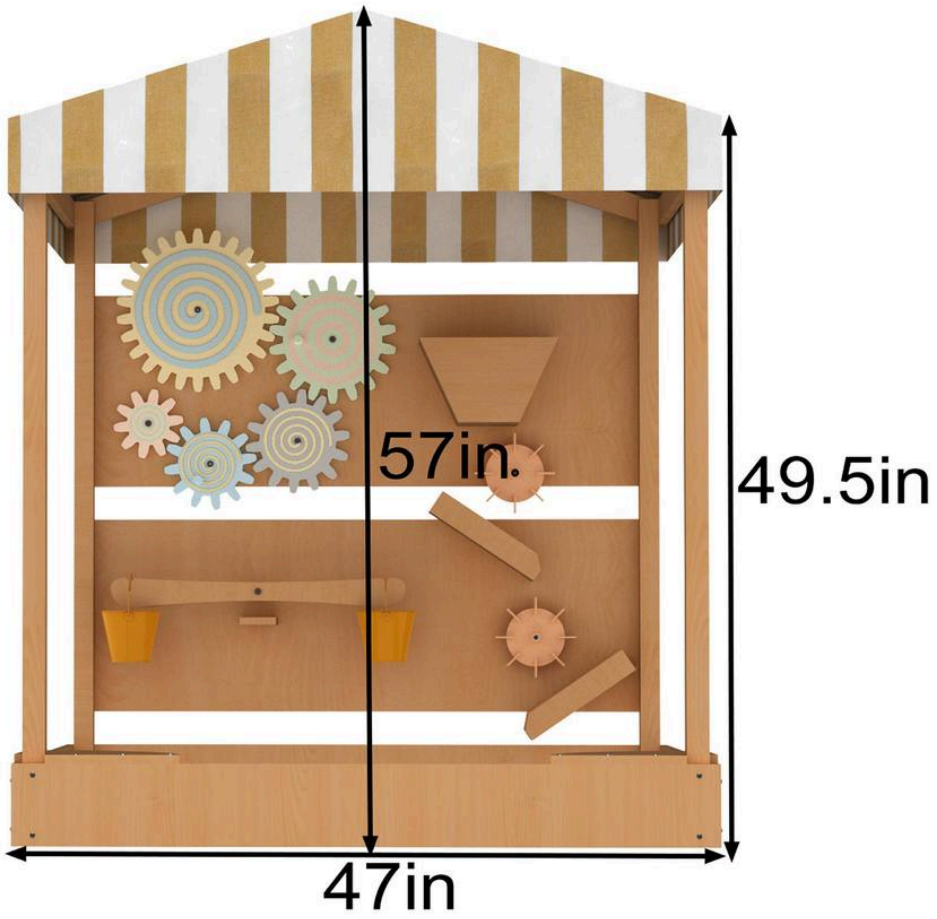
57in
49.5in
47in

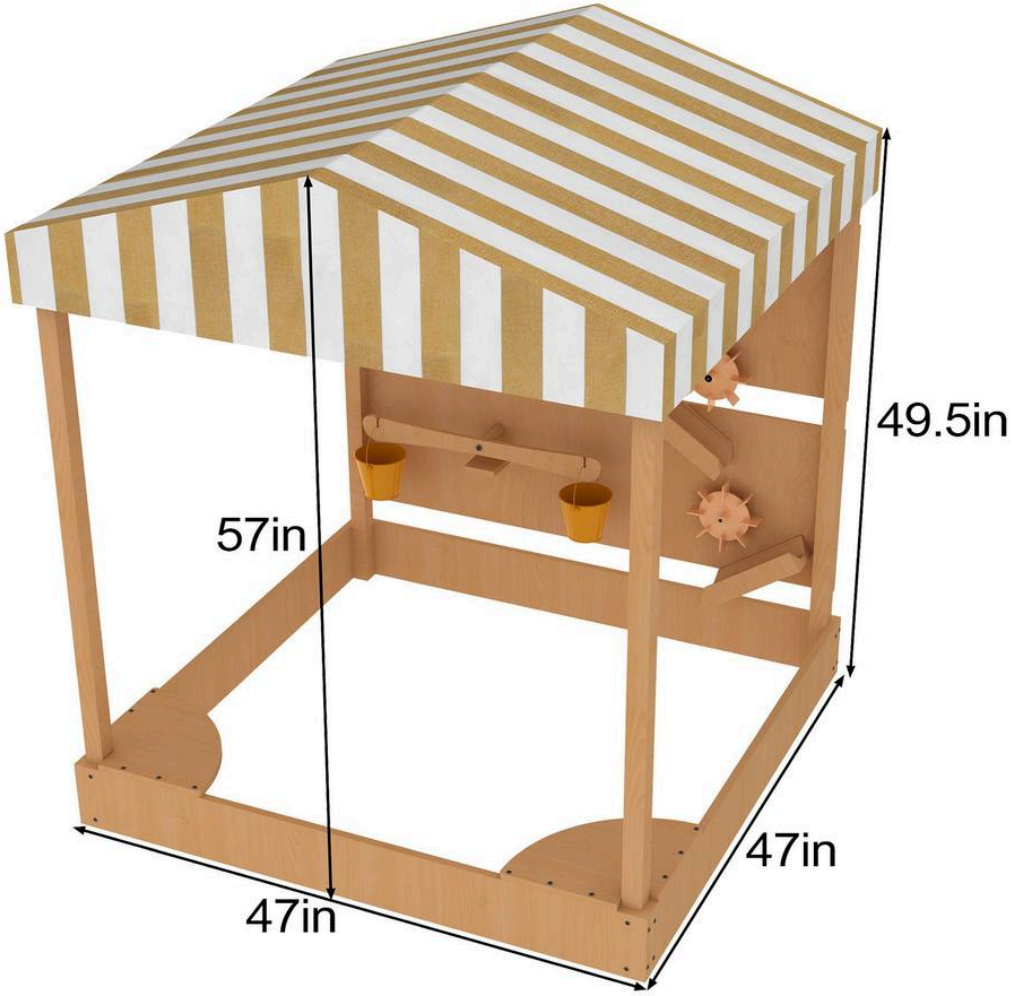
49.5in
57in
47in
47in