avenlur

Outdoor Sycamore LG by Avenlur

⚠ WARNING:

Adult assembly required.

Need Help?

CALL US AT 888.697.3931 / M-F 9AM - 5PM PT (12PM - -8PM ET)

OR EMAIL US AT INFO@AVENLUR.COM

V2

PLEASE READ THIS BEFORE STARTING ASSEMBLY

PLEASE RETAIN THESE INSTRUCTIONS FOR FUTURE REFERENCE. KEEP THEM IN A SAFE PLACE, WHERE YOU CAN REFER TO THEM AS NEEDED. IN ORDER TO PROVIDE YOU WITH THE MOST EFFICIENT SERVICE, IT IS REQUIRED THAT YOU PROVIDE US WITH THE PART NUMBERS WHEN ORDERING PARTS.

PLEASE HAVE THE FOLLOWING INFORMATION WHEN YOU MAKE YOUR CALL:
1-YOUR ORDER NUMBER
2-DESCRIPTION OF THE PART FROM THE PARTS LIST AND THE PART NUMBER
3-CONTACT US AT: **AVENLUR- 888-697-3931**

READ THE ASSEMBLY MANUAL COMPLETELY, PAYING SPECIAL ATTENTION TO THE IMPORTANT TIPS AND SAFETY INFORMATION. WE ENCOURAGE OUR CUSTOMERS TO HIRE PROFESSIONAL HELP FOR INSTALLING THIS PLAYSET.

SEPARATE AND IDENTIFY ALL PARTS TO MAKE SURE THAT YOU HAVE ALL OF THE PARTS LISTED. IF YOU CAN'T FIND ALL OF THE PARTS, CHECK THE PACKING MATERIAL. SMALL PARTS MAY HAVE FALLEN OUT OF THE PACKET AND INTO THE MAIN BOX DURING TRANSIT.

PLEASE HAVE AN ELECTRIC SCREWDRIVER AVAILABLE FOR ASSEMBLY.

PLEASE NOTE: THE WOOD IS TREATED WITH ANTI-CORROSIVE TREATMENT WHICH MAY RESULT IN VERY SMALL CRACKS OR ROUGH SURFACES IN AREAS. THIS IS VERY NORMAL AND STANDARD. THIS WILL NOT AFFECT THE SAFETY AND STABILITY OF THE WOOD AND THE SWINGSET.

Equipment is recommended for use by **ages 3 and older. Children ages 1-3 may use the baby swing, which can be purchased separately**. Our products are solid and strong and have been used in business, commercial and school settings. However, our warranty only covers use in residential settings.

Please follow all recommendations below. **Failure to do so may result in the warranty being void and/or safety violations that could result in serious injury.** This manual contains helpful information concerning Assembly Preparation, installation Procedure, and Required Maintenance Always keep the safety of your children in mind as your play structure is being built and as your children play on the set. Before your children play on the set please review the Operation Instructions with them to help ensure their safety.

⚠WARNING:

Children must NOT use this playcenter until the unit has been completely assembled and inspected by an adult to ensure the set has been properly installed, leveled and anchored.

⚠WARNING:

This Symbol points out important safety instructions which, if not followed, could endanger the personal safety of yourself and your children and/or damage your property. You MUST read and follow all instructions in this manual before attempting to use this playcenter.

⚠WARNING:
CONTINUOUS ADULT SUPERVISION REQUIRED!

⚠WARNING:
STRANGULATION HAZARDS

1. Never allow children to play with ropes, clotheslines, pet leashes, cables, chains or cord-like items when using this playcenter or to attach items to playcenter.
2. Never allow children to wear loose fitting clothing, ponchos, hoods, scarves, capes, necklaces or items with draw-strings, cords or ties when using this playcenter.
3. Never allow children to wear bike or sport helmets when using this playcenter.
4. Failure to prohibit these items increases the risk of serious injury and death to children from entanglement and strangulation.

⚠WARNING:

SERIOUS HEAD INJURY HAZARD

Maintaining shock absorbing materials under and around the playcenter as recommended in the installation & operation instructions, installation over concrete, asphalt, carpet and other hard surfaces creates a risk of

serious injury or death from falls to the ground.

Positioning Your Playcenter

1. The playcenter is designed to be installed on a level surface by an Adult with an Adult helper. Place in a flat area of your yard to minimize ground preparation.
2. Choose a leveled location for the equipment, this can reduce the likelihood of the play set tipping over and loose-fill surfacing material washing away during heavy rains.
3. Place the equipment not less than **6 ft (1.8 m)** from any structure or obstruction such as a fence, garage, house, overhanging branches, laundry lines, or electrical wires.
4. Provide enough room so that the children can use the equipment safely. For example, for structures with multiple play activities, a slide should not exit in front of a swing.
5. It is a good idea to place your playcenter in an area that is convenient for adults to watch children at play.
6. Create a site free of obstacles that could cause injuries- such as low overhanging tree branches, overhead wires, tree stumps and/or roots, large rocks, bricks and concrete. Additional suggestions in the Suggested Playground Surfacing Section.

Suggested Playground Surfacing

1. Do not install home playground equipment over concrete, asphalt, packed earth, or any other hard surface. A fall onto a hard surface can result in serious injury to the equipment user.
2. Do not install loose fill surfacing over hard surfaces such as concrete or asphalt. Shredded bark mulch, wood chips, fine sand and fine gravel, are added as shock absorbing materials after assembly. If used properly these materials can absorb some of the impact of a child's fall.
3. All surface material should extend a minimum of 6 feet in all directions around the play area.
4. Do not apply playground surfacing until after the unit is completely constructed. Playcenter should not be built on top of surfacing.
5. Use containment, such as digging out around the perimeter and/or lining the perimeter with landscape edging.
6. Installations of rubber tiles or poured-in-place surfaces (other than loose-fill materials) generally require a professional and are not "do-it-yourself" projects.
7. Use Playground Surfacing Materials (other than loose-fill materials) which comply with the safety standard ASTM F1292 Standard Specification of Impact Attenuation of Surfacing Materials within the Use Zone of Playground Equipment.

Operating Instructions:

NOTE: Your children's safety is our No.1 concern.

Observing the following statements and warnings reduces the likelihood of serious or fatal injury. Please review these safety rules regularly with your children.

1. On-site adult supervision is required.
2. Instruct children not to walk close to, in front of, behind, or between moving swings or other moving playground equipment.
3. Instruct children to sit in and never stand on swings.
4. Instruct children not to twist the chains and ropes and not to loop them over the top support bar, since this may reduce the strength of the chain or rope.
5. Instruct children not to jump from swings or other playground equipment in motion.
6. Instruct children not to push empty seats. The seat may hit them and cause serious injury.
7. Instruct and teach children to sit in the center of the swings with their full weight on the seats.
8. Instruct children not to use the equipment in a manner other than intended.
9. Instruct children to always go down slides feet first. Never slide head first.
10. Instruct children to look before they slide to make sure no one is at the bottom.
11. Instruct children to never run up a slide, as this increases their chances of falling.
12. The parents should dress children appropriately. (Examples would include the use of well-fitting shoes and the avoidance of ponchos. scarfs, and other loose-fitting clothing that is potentially hazardous while using equipment).
13. Instruct children not to climb when the equipment is wet.
14. Instruct children to never jump from high areas. They should always use the ladder, ramp or slide.
15. Verify that any suspended climbing ropes, chain, or cable are secured at both ends and that they cannot be looped back on it.
16. Instruct children not to attach items to the playground equipment that are not specifically designed for use with the equipment, such as, but not limited to, jump ropes, clothes line, pet leashes, cables and chain as they may cause a strangulation hazard.
17. Instruct children to never wrap their legs around swing chain. instruct children to never slide down the swing chain. instruct children to remove their bike or other sports helmet before playing on playground equipment.

Maintenance Instructions:

General Maintenance:

1. Check the wood and hardware every two weeks due to wood expansion and contraction. It is particularly important that this procedure be followed at the beginning of each season.
2. Inspect wood parts monthly. The grain of the wood sometimes will lift in the dry season causing splinters to appear. Light sand may be necessary to maintain a safe playing environment. Treat your playcenter with stain regularly, to help prevent severe checking/splitting and other weather damage.
3. A waterborne ultra violet and water repellent stain has been applied to your playcenter. This is temporary. Once or twice a year, depending on your climate conditions, you must apply some type of protection (sealant) to the wood of your unit. Prior to the application of sealant, lightly sand any “rough” spots on your playcenter. Please note this is a requirement of your warranty.
4. Assembling and maintaining the playcenter on a level location is very important. As your children play, your playcenter will slowly dig its way into the soil, and it is very important that it settles evenly. Make sure the playcenter is level and true one each year or at the beginning of each play season.

At the beginning of each play season:

1. Tighten all hardware.
2. Lubricate all metallic moving parts per manufacturer's instructions.
3. Check all protective coverings on bolts, pipes, edges and corners. Replace if they are loose, cracked, or missing.
4. Check all moving parts including swing seats, ropes, cables, and chains for wear, rust, or other deterioration. Replace as needed.
5. Check metal parts for rust. If found, sand and repaint using a non Lead-based paint meeting the requirements of 16 CFR 1303.
6. Check all wood members for deterioration and splinters. Sand down splinters use a sealant on deteriorating wood parts.
7. Rake and check depth of loose fill protective surfacing materials to prevent compaction and to maintain appropriate depth. Replace as necessary.

Twice a month during play season:

1. Tighten all hardware.
2. Check all protective coverings on bolts, pipes, edges and corners. Replace if they are loose, cracked, or missing.
3. Rake and check depth of loose fill protective surfacing materials to prevent compaction and to maintain appropriate depth. Replace as necessary.

Once a month during play season:

1. Lubricate all metallic moving parts per manufacturer's instructions.
2. Check all moving parts including swing seats, ropes, cables, and chains for wear, rust, or other deterioration. Replace as needed.

At the end of each play season or when the temperature drops below 32° F:

1. Remove plastic swing seats and other items as specified by the manufacturer and take indoors or do not use.
2. Rake and check depth of loose fill protective surfacing materials to prevent compaction and to maintain appropriate depth. Replace as necessary.

Disposal Instructions:

When the Playcenter use is no longer desired, it should be disassembled and disposed of in such a way that no unreasonable hazards will exist at the time the unit is discarded.

What causes weathering? Does it affect the strength of my product?

One of the main reasons for weathering is the effects of water (moisture); the moisture content of the wood at the surface is different from the interior of the wood. As the climate changes, moisture moves in or out of the wood, causing tension which can result in checking and or warping. You can expect the following due to weathering. These changes will not affect the strength of the product:

1. **Checking** is surface cracks in the wood along the grain. A post (4"x 4") will experience more checking than a board (1"x4") because the surface and interior moisture content will vary more widely than in thinner wood.

2. **Warping** results from any distortion (twisting, cupping) from the original plane of the board and often happens from rapid wetting and drying of the wood.

3. **Fading** happens as a natural change in the wood color as it is exposed to sun-light and will turn gray over time.

How can I reduce the amount of weathering to wood products?

1. Your wood product is coated with a water based wood sealer which contains water repellent and an Ultraviolet stabilizer. Sunlight will break down the coating, so we recommend applying a water repellent or stain on a yearly basis (see your local stain and paint supplier for a recommended product). You must apply some type of protection (sealant) to the wood of your product. Please note this is a requirement of your warranty. Most weathering is just the normal result of nature and will not affect safety. However if you are concerned that a part has experienced a severe weathering problem please call our customer service department for further assistance.
2. Inspect wood parts monthly. The grain of the wood sometimes will lift in the dry season causing splinters to appear. Light sanding may be necessary to maintain a safe environment. Treating your Product with protection (sealant) after sanding will help prevent severe checking/ splitting and other weather damage.
3. During inclement weather, store the playset, or bring it inside. This set is not designed to stay outdoors year-round. However, If you inspect and treat the wood regularly, it will last much longer. Mold, rot, cracks, splinters, and fading are not covered under warranty.

Tools needed

Electric Screwdriver

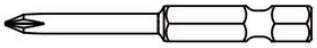

① Phillips Screwdriver Bit

② 4mm Hex Screwdriver Bit

Assembly Tip: > While Avenlur provides the tools for assembly, Using an electric screwdriver or Tool ① and Tool ② is highly recommended for a faster, more efficient setup.

1 ×2 69in

2 ×2 62in

3 ×1 59.5in

4 ×1 59.5in

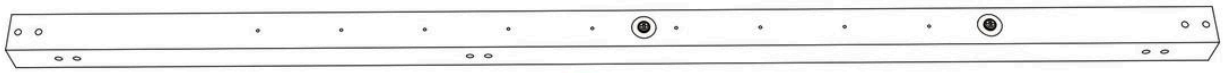

5 ×1 59.5in

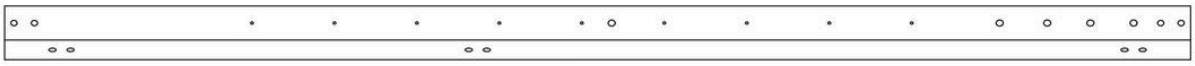

6 ×1 59.5in

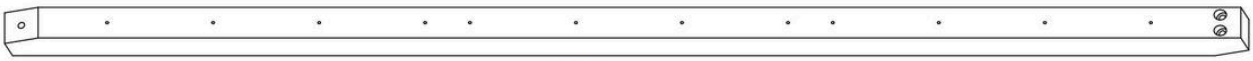

7 ×1 62.5in

8 ×1 62.5in

9 ×1 62.5in

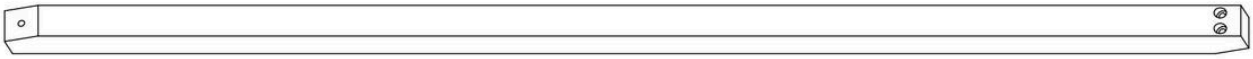

10 ×3 62.5in

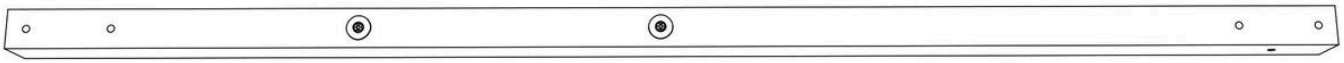

11 ×1 66in

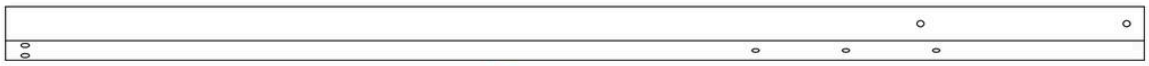

12 ×2 57in

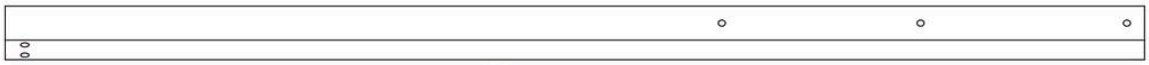

13 ×2 57in

14 ×1 38in

15 ×1 31in

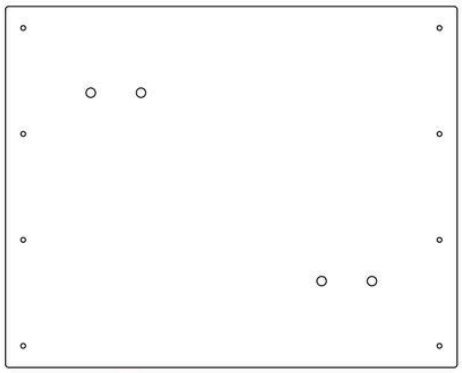

16 ×3 22.5in

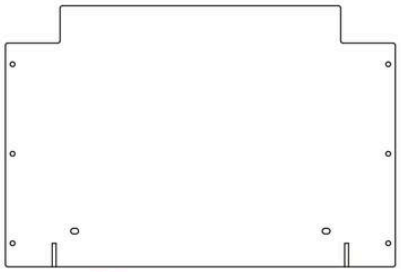

17 ×1 19.5in

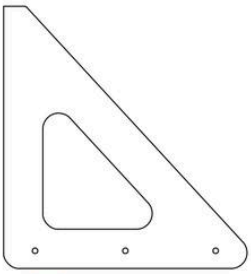

18 ×2 13in

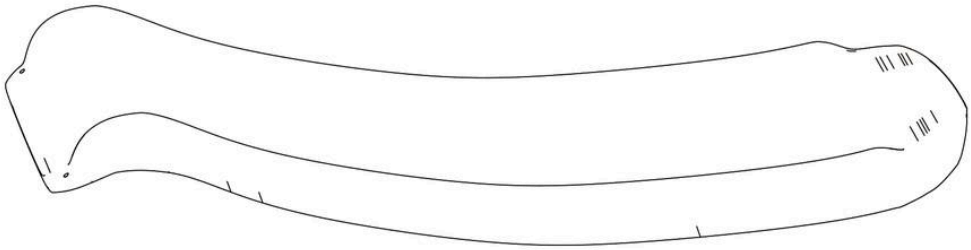

19 ×1

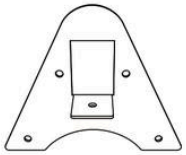

20 ×2

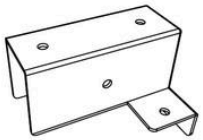

21 ×1

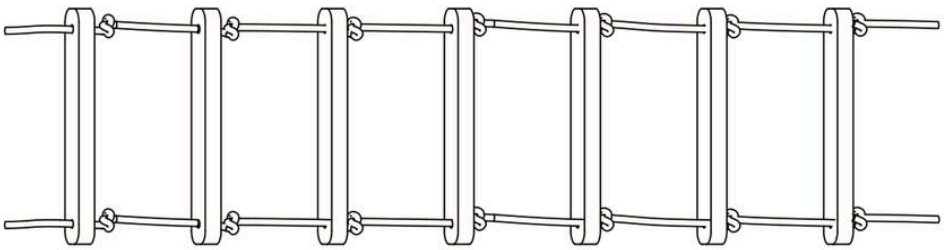

22 ×1

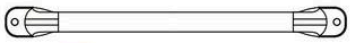

23 ×12 17in

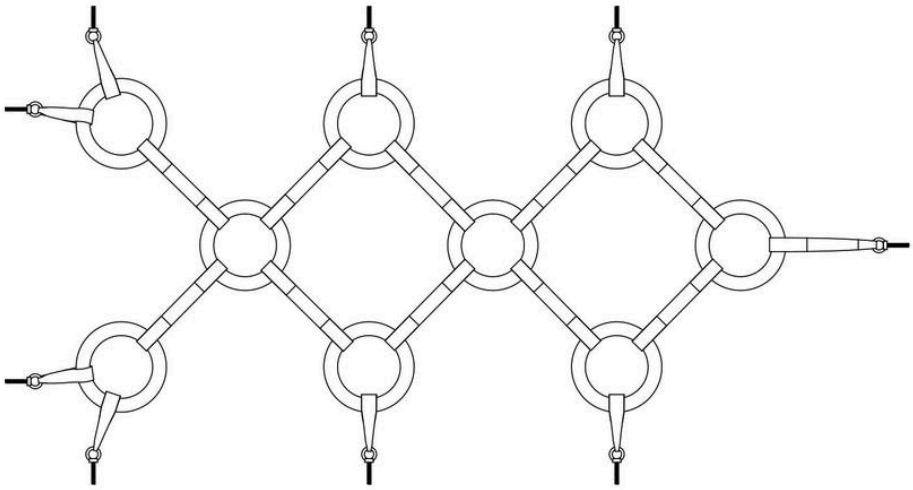

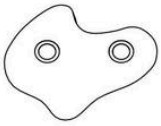

24 ×6

25 ×1

26 ×1

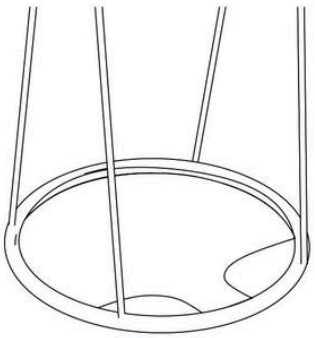

27 ×1

28 ×2

M6×30
A×18

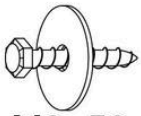

M8×50
B×2

M5×45
C×30

M6×30
D×9

M6×40 M6×30
E×8

M6×50 M6×30
F×5

M6×60 M6×30
G×3

M6×60 M6×30
H×6

M6×70 M6×30
I×18

M6×70 M6×30
J ×4

M6×90 M6×30
K×4

M6×110 M6×30
L ×1

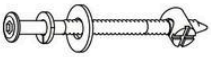

M6×85 M6×13
M×12

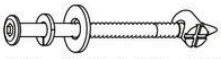

M6×90 M6×13
N×8

M10×35
Q×12

M5×16 M5×15
R ×2

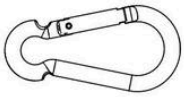

S×4

4mm
T×2

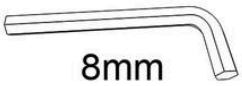

8mm
U×1

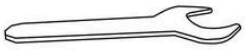

17mm
W×1

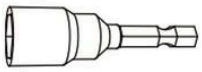

10mm
X×1

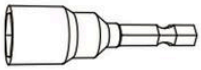

13mm
Y×1

3mm
Z×2

M10
Z1 ×12

01-1 Note: Pay attention to all the black bubbled section markers. The manual may refer back to those later.

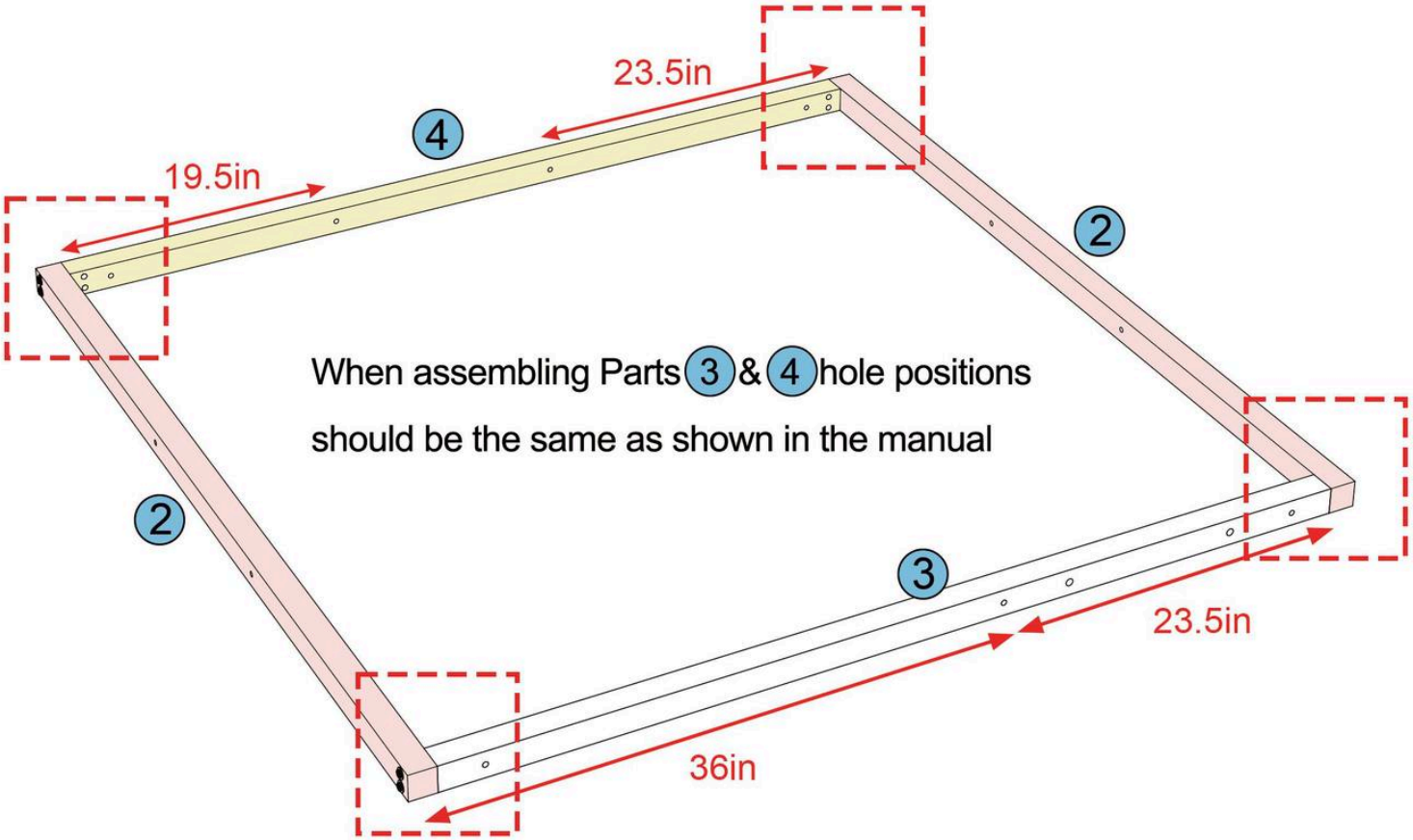

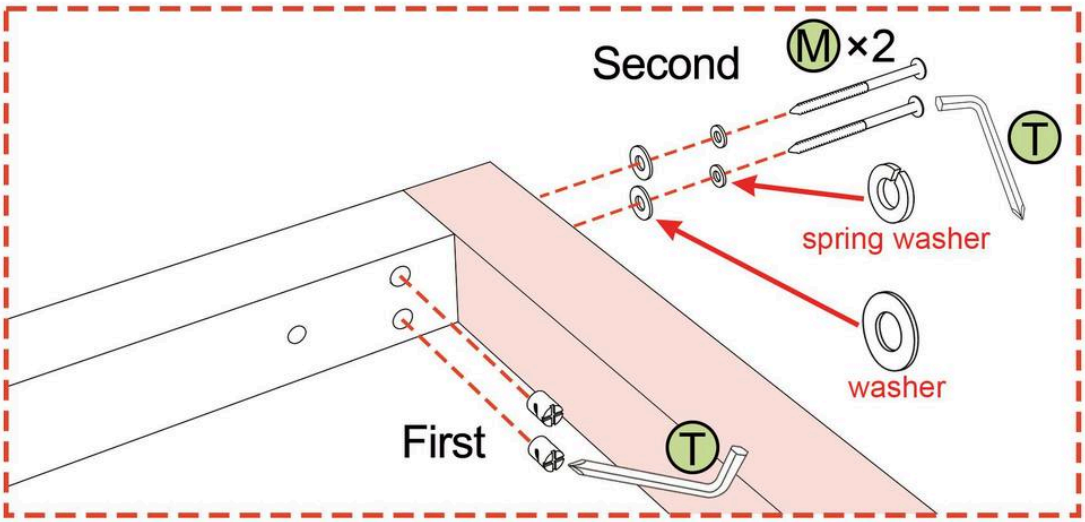

First: Put the connector in the hole with the crosshairs facing out. Use the Philips screwdriver side of tool part T to hold the connector stationary for the threading of the screw to go in.
Second: Use the hex side of the other tool part T to thread the screw into the hole of the connector.

M	M6×85 M6×13	8
T	4mm	2

02-1

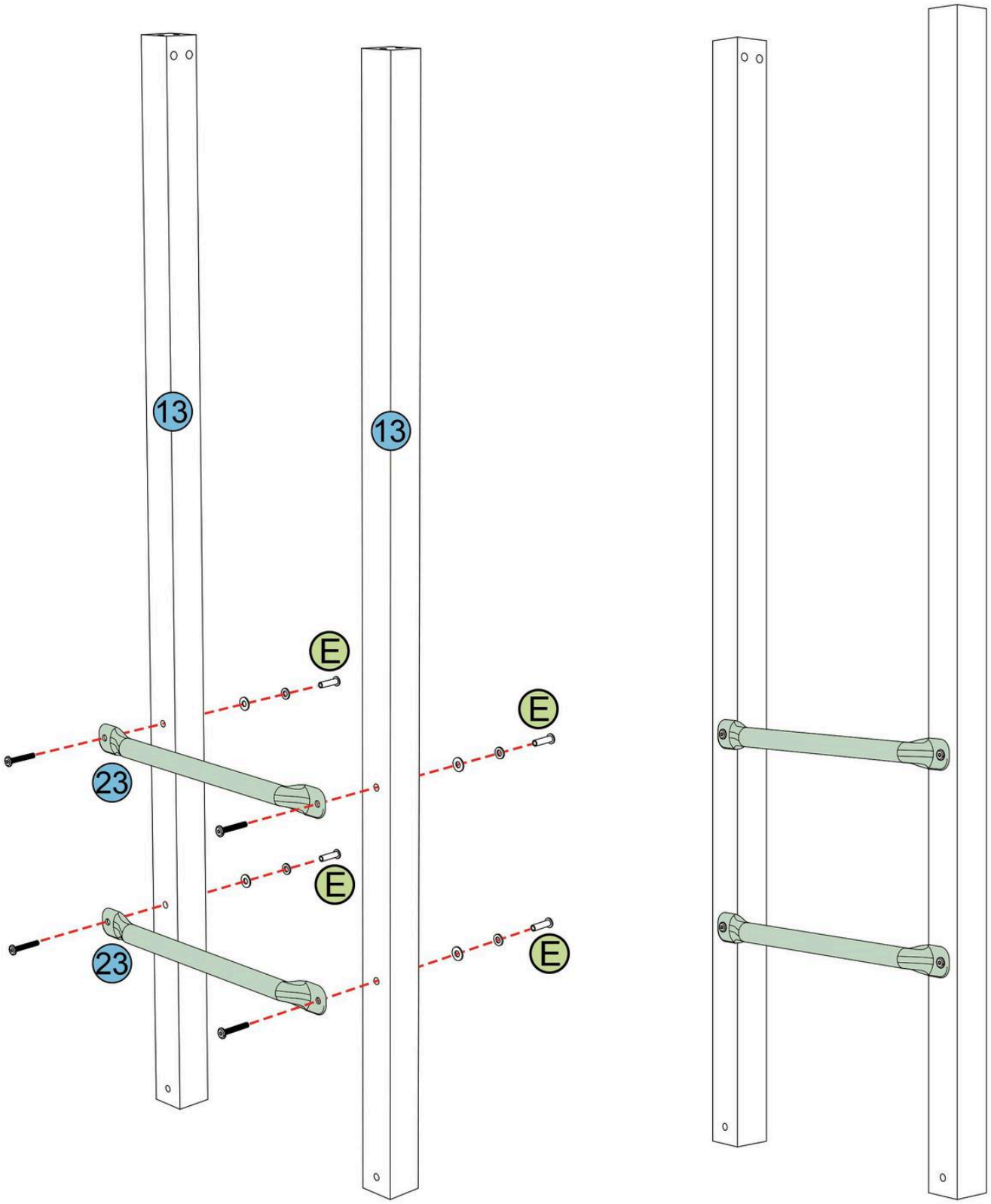

E	M6×40 M6×30	4
T	4mm	2

03-1

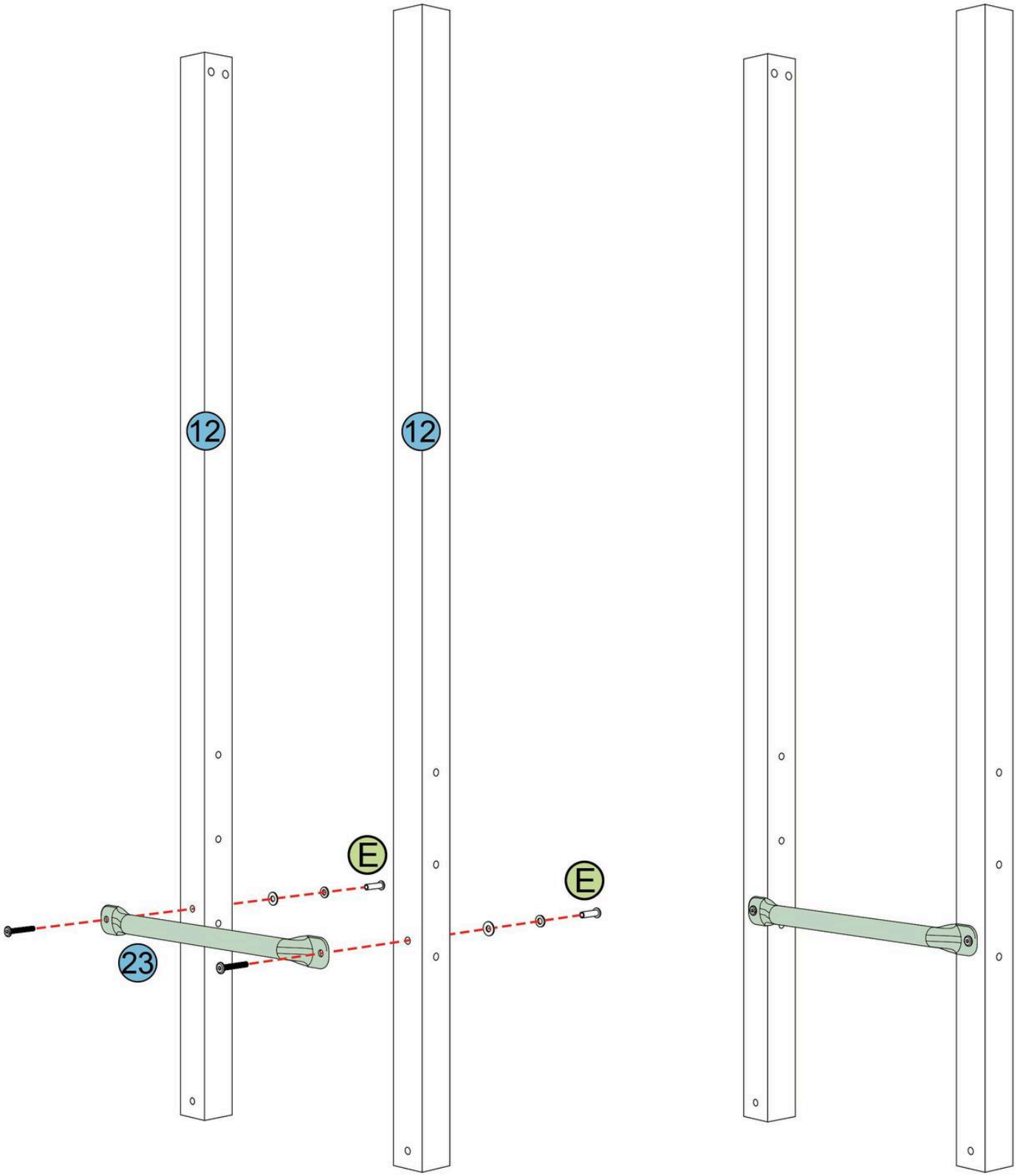

E	M6×40 M6×30	2
T	4mm	2

04-1

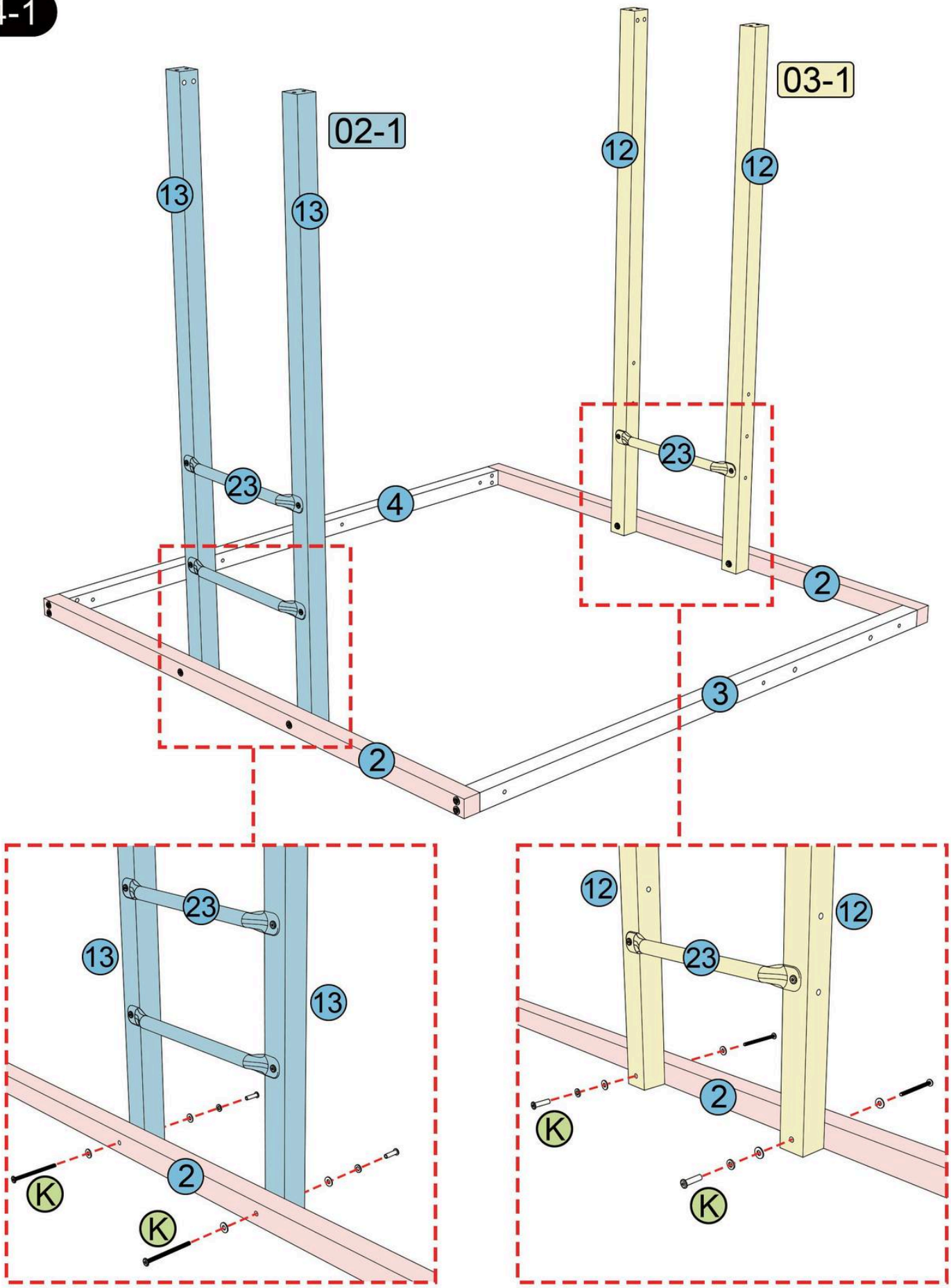

K	M6×90 M6×30	4
T	4mm	2

Note: All Part 23 is placed on the left side as shown, it will be more suitable for child to climb.

05-1

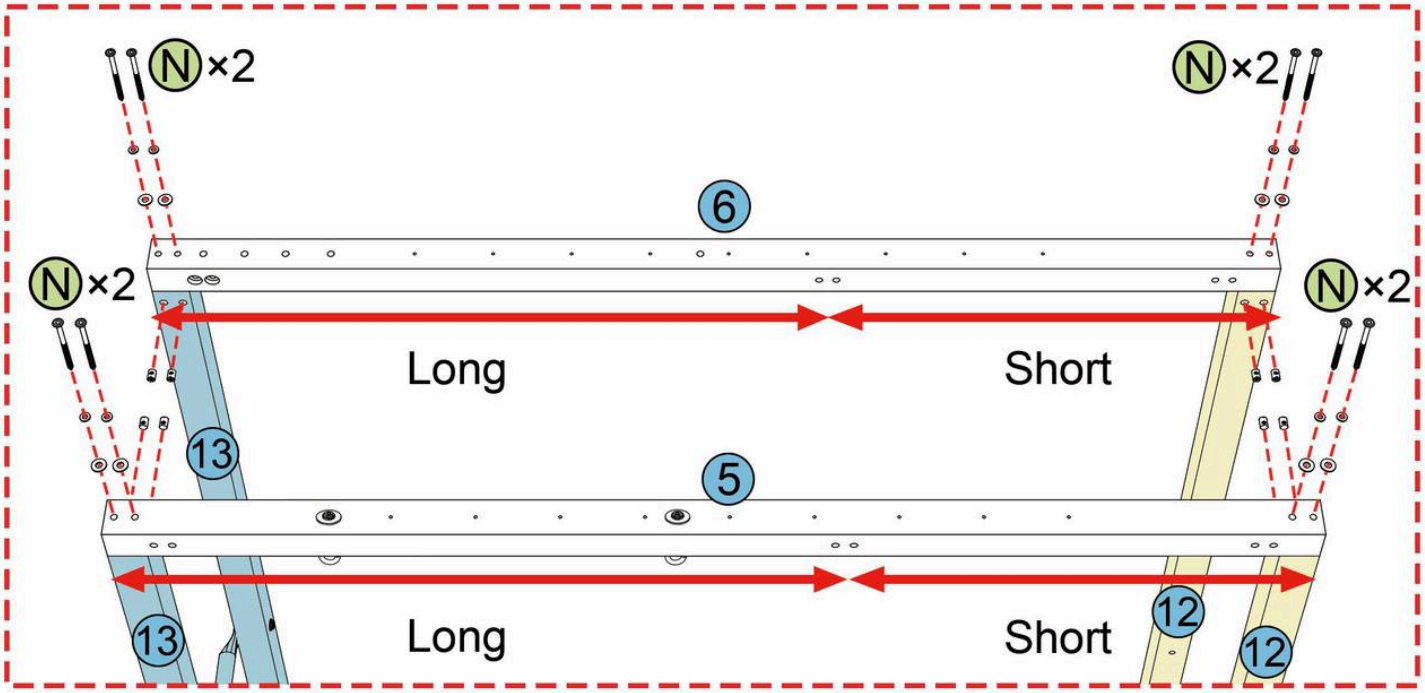

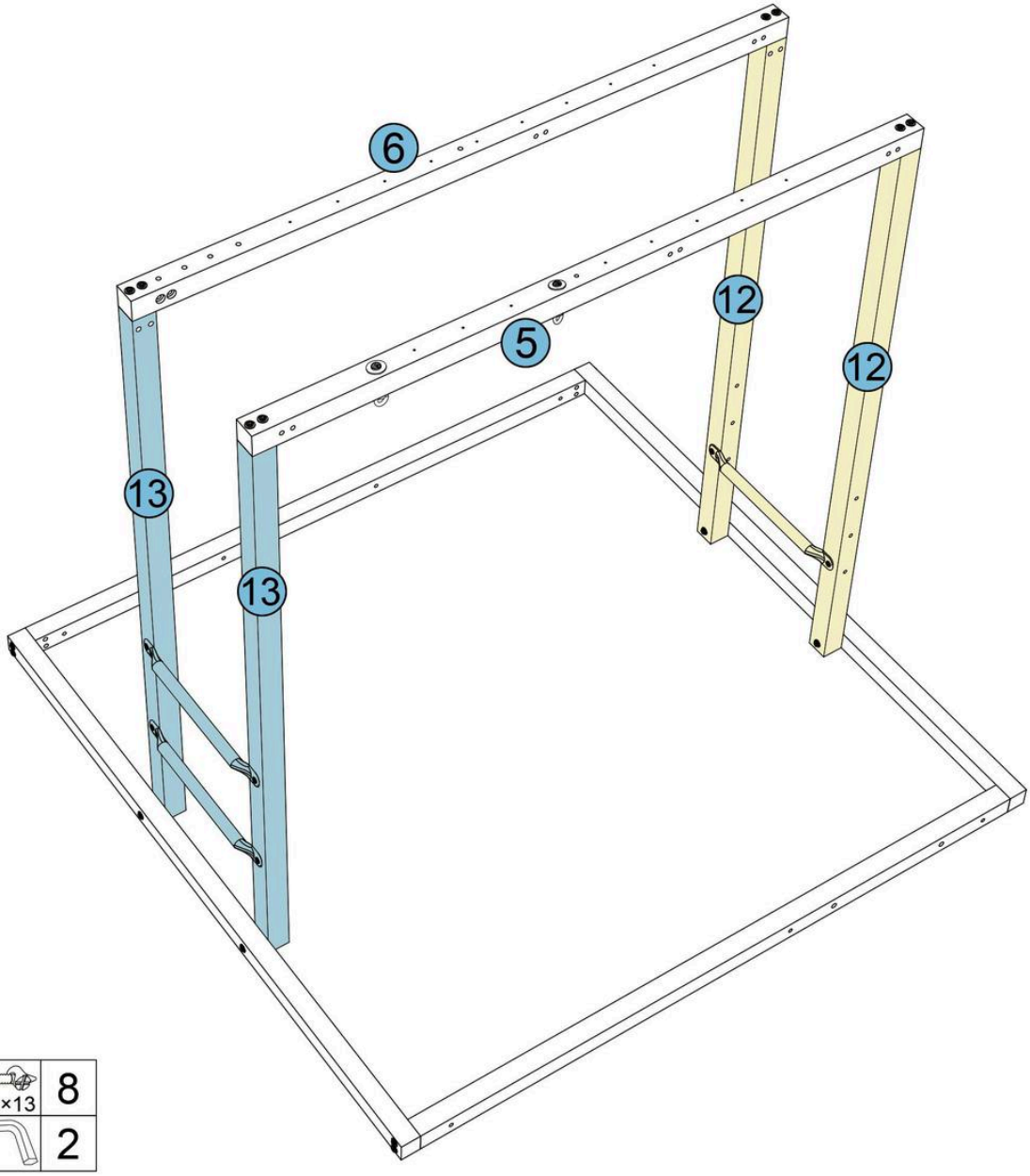

N	M6×90 M6×13	8
T	4mm	2

06-1

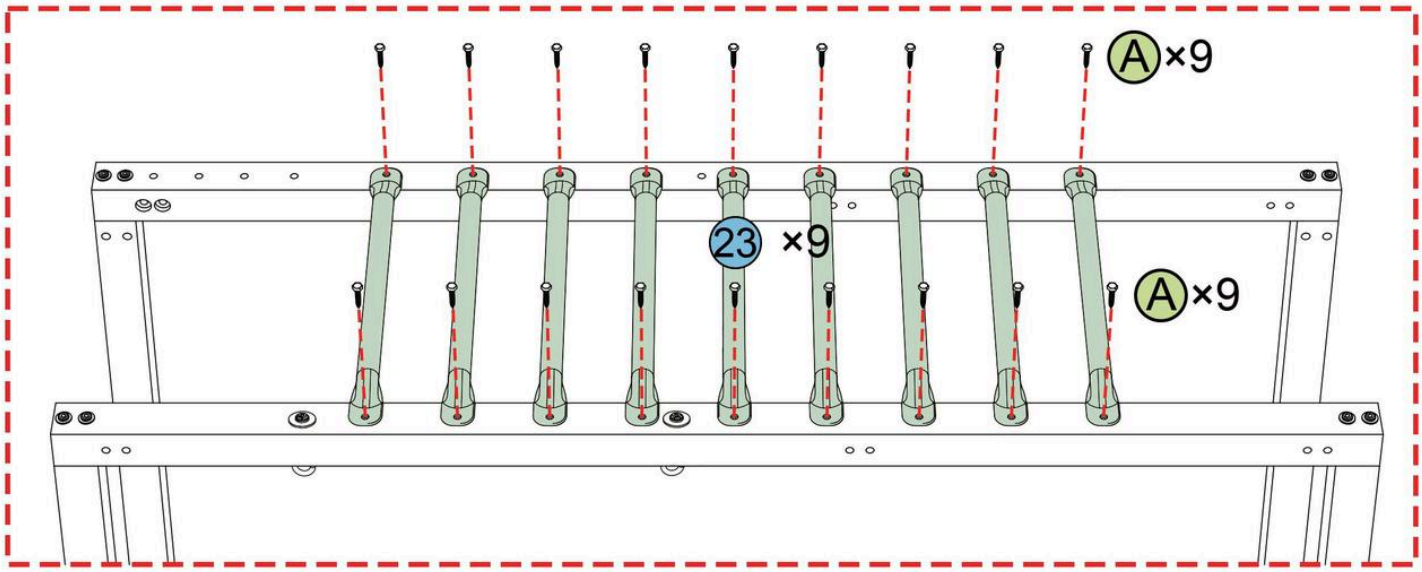

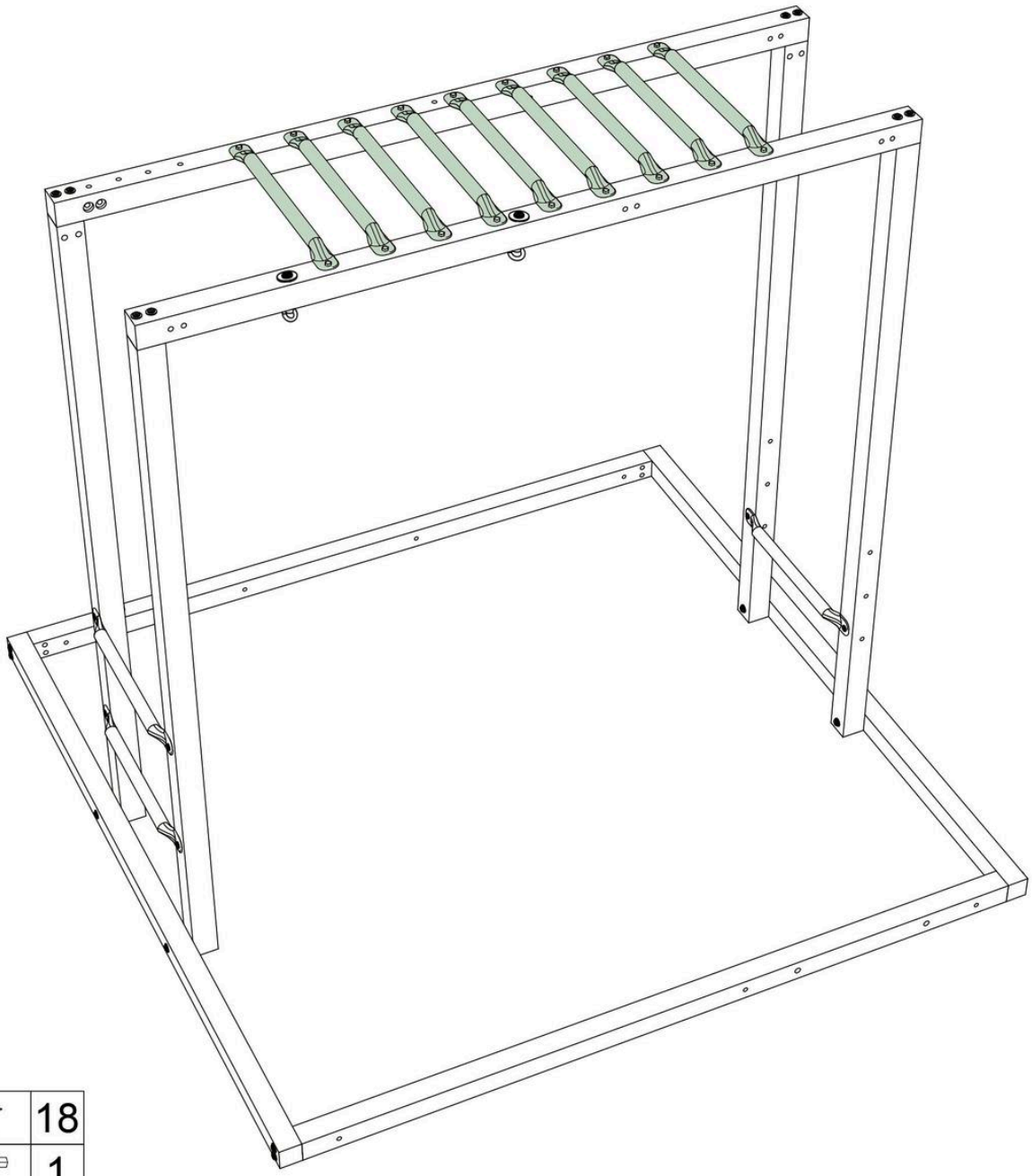

A	M6×30	18
X	10mm	1

07-1

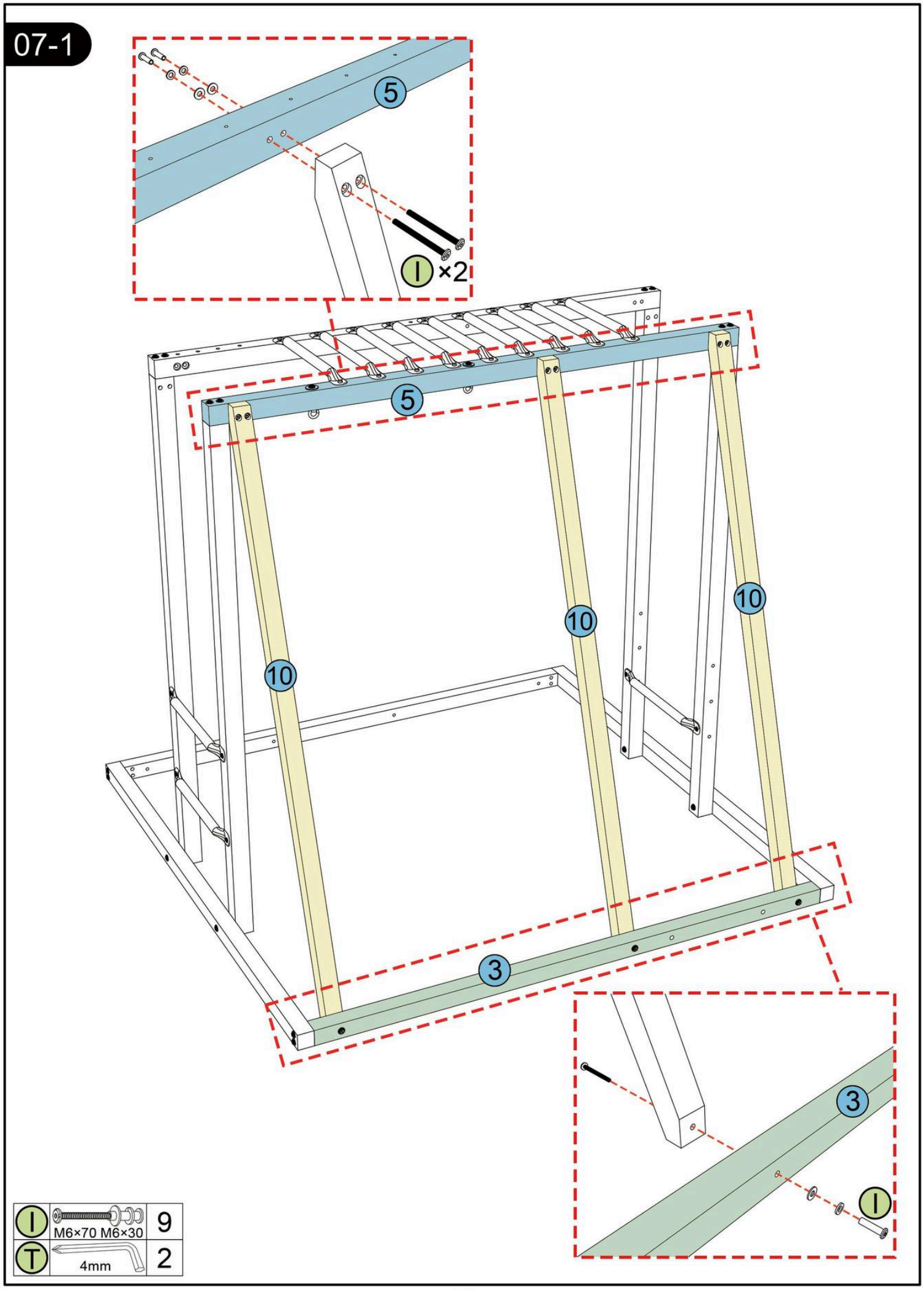

I	M6×70 M6×30	9
T	4mm	2

08-1

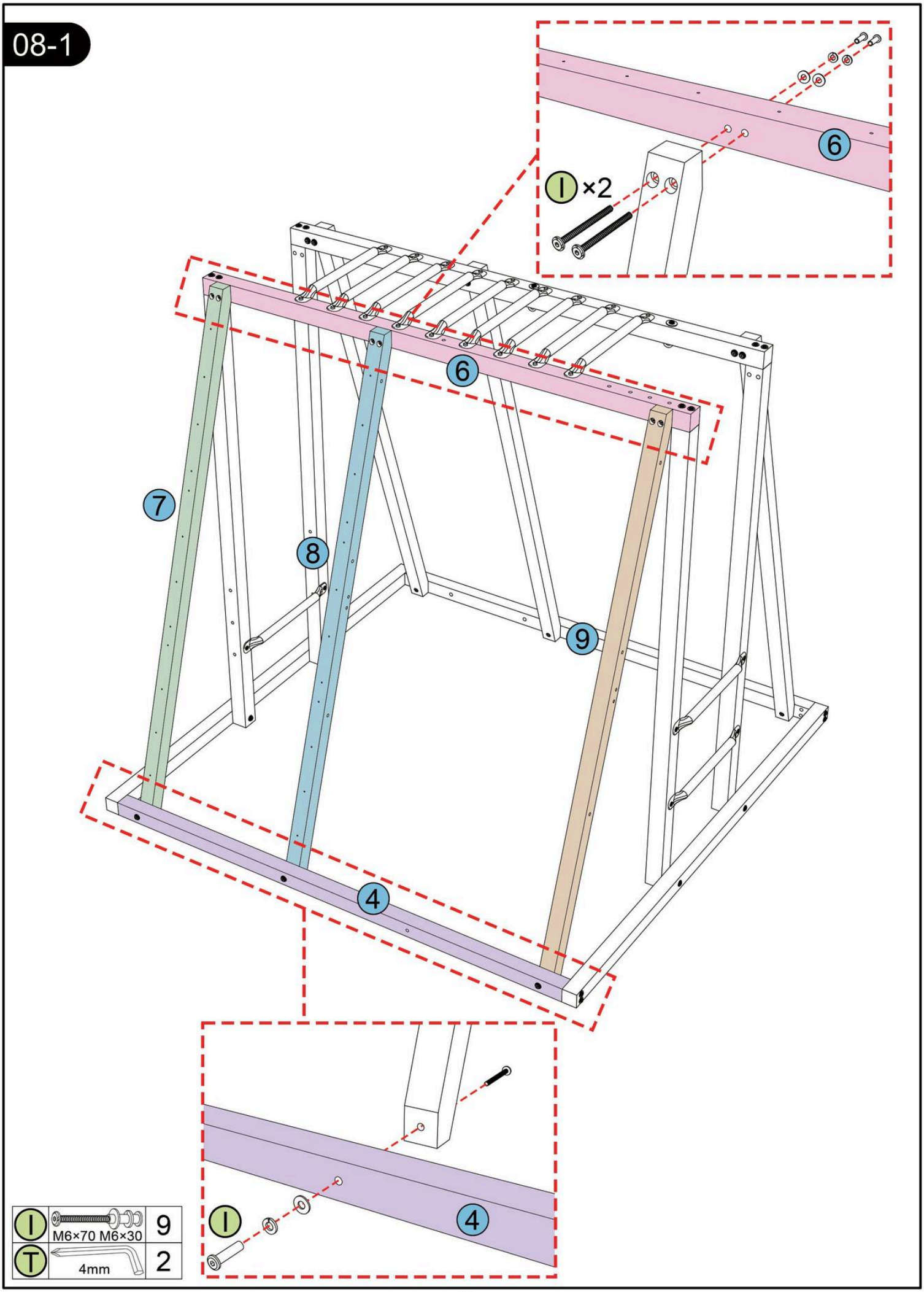

09-1

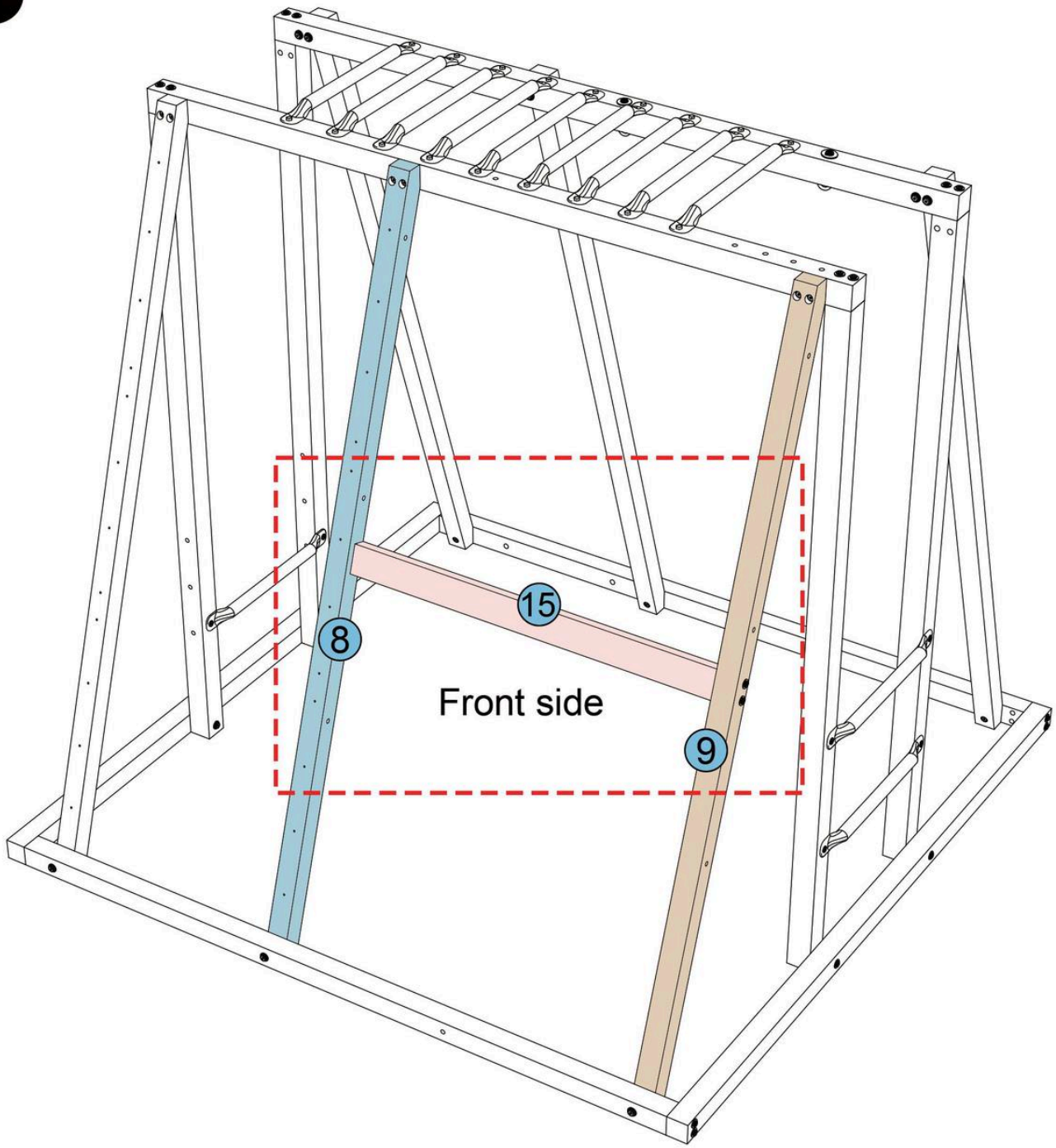

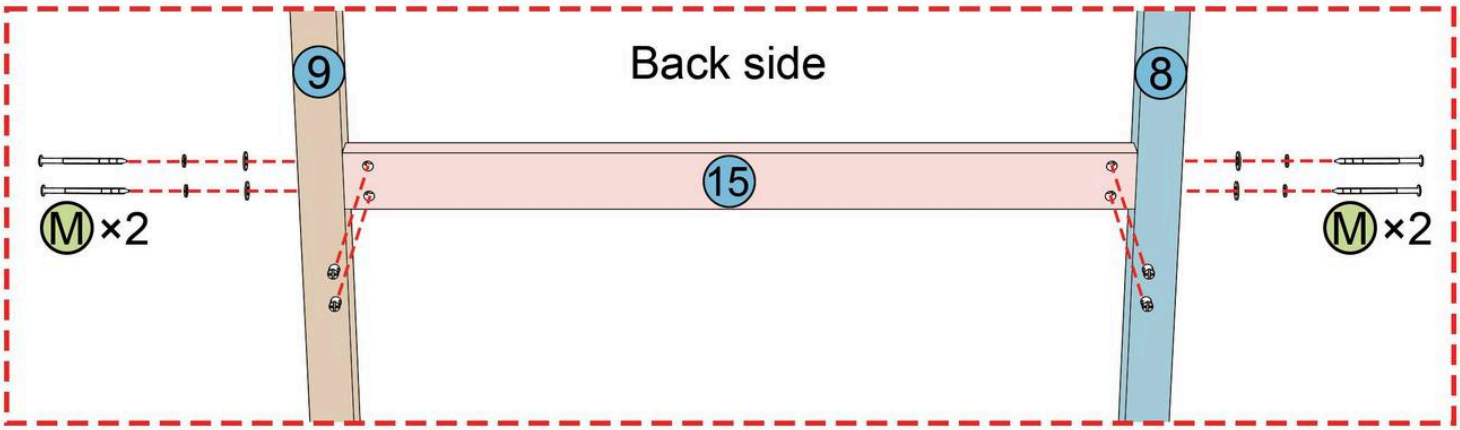

M	M6×85 M6×13	4
T	4mm	2

10-1

D ×2

D ×3

25

D ×3

D ×1

When assembling this step, first thread all the screws in place, then tighten them fully

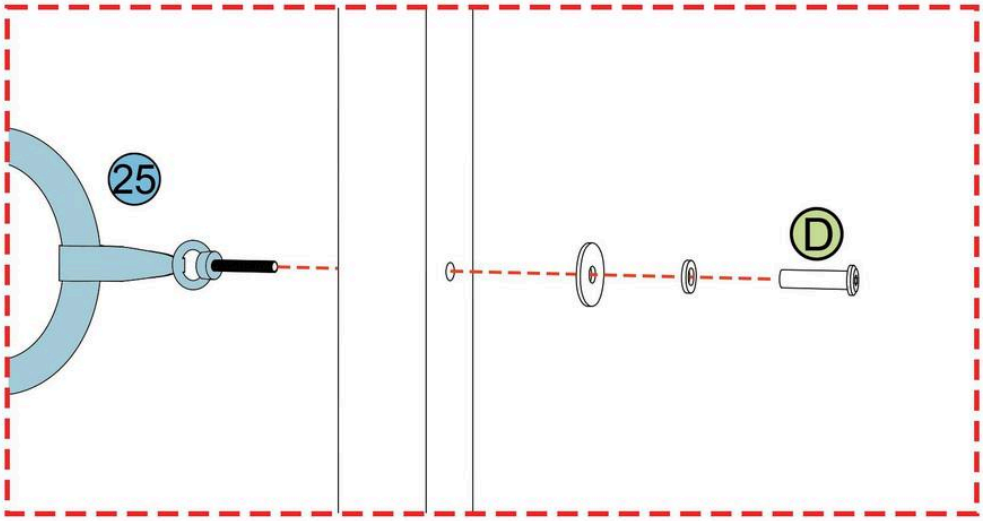

D	M6×30	9
T	4mm	1

11-1

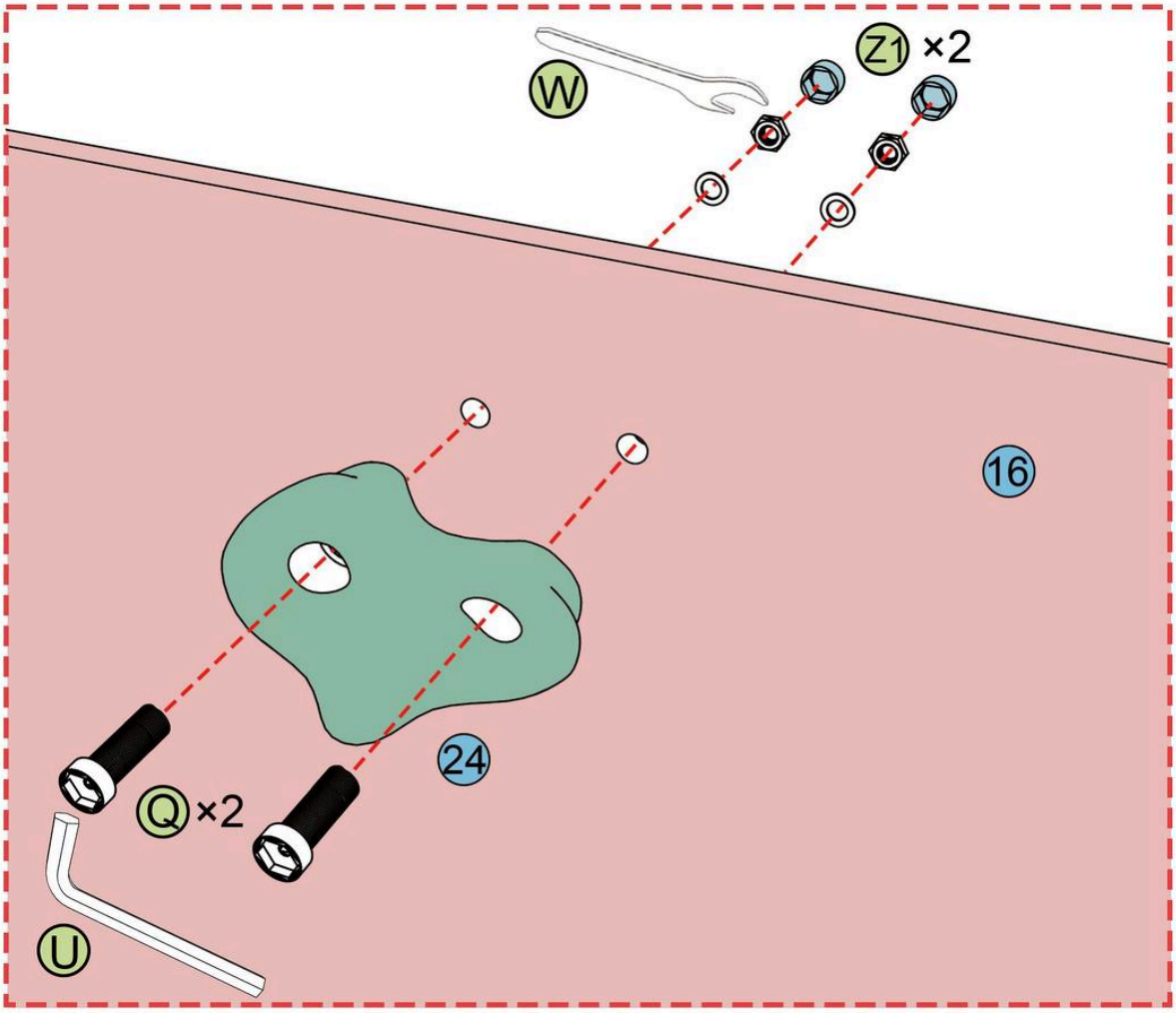

Repeat this step 3 times

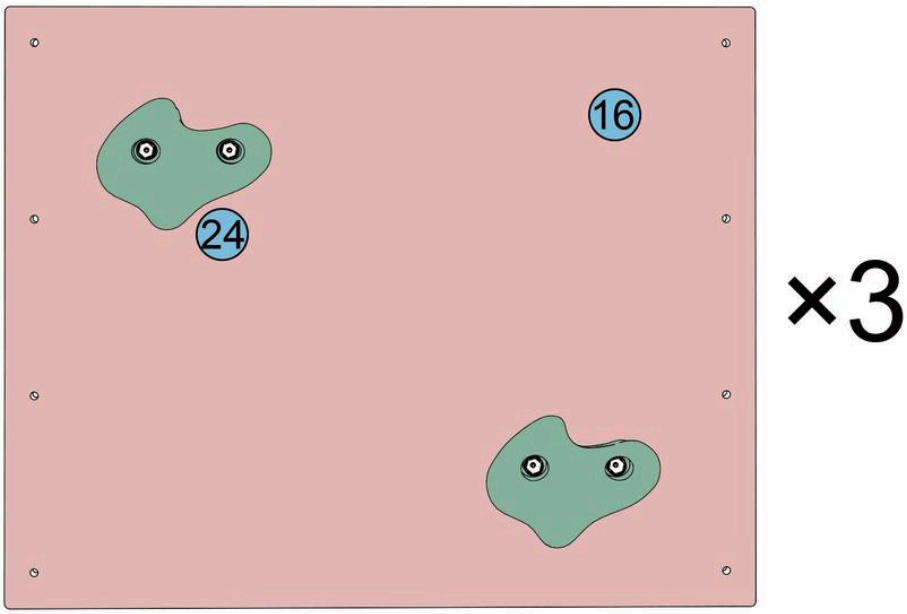

Q	M10×35	12
U	8mm	1
W	17mm	1
Z1	M10	12

Note: Make sure the blue seal rim on the nut is facing outward towards you. You may need to twist very hard to secure (and if needed spray WD-40) being that it's meant to be very tight and secure for children to climb on!

11-2

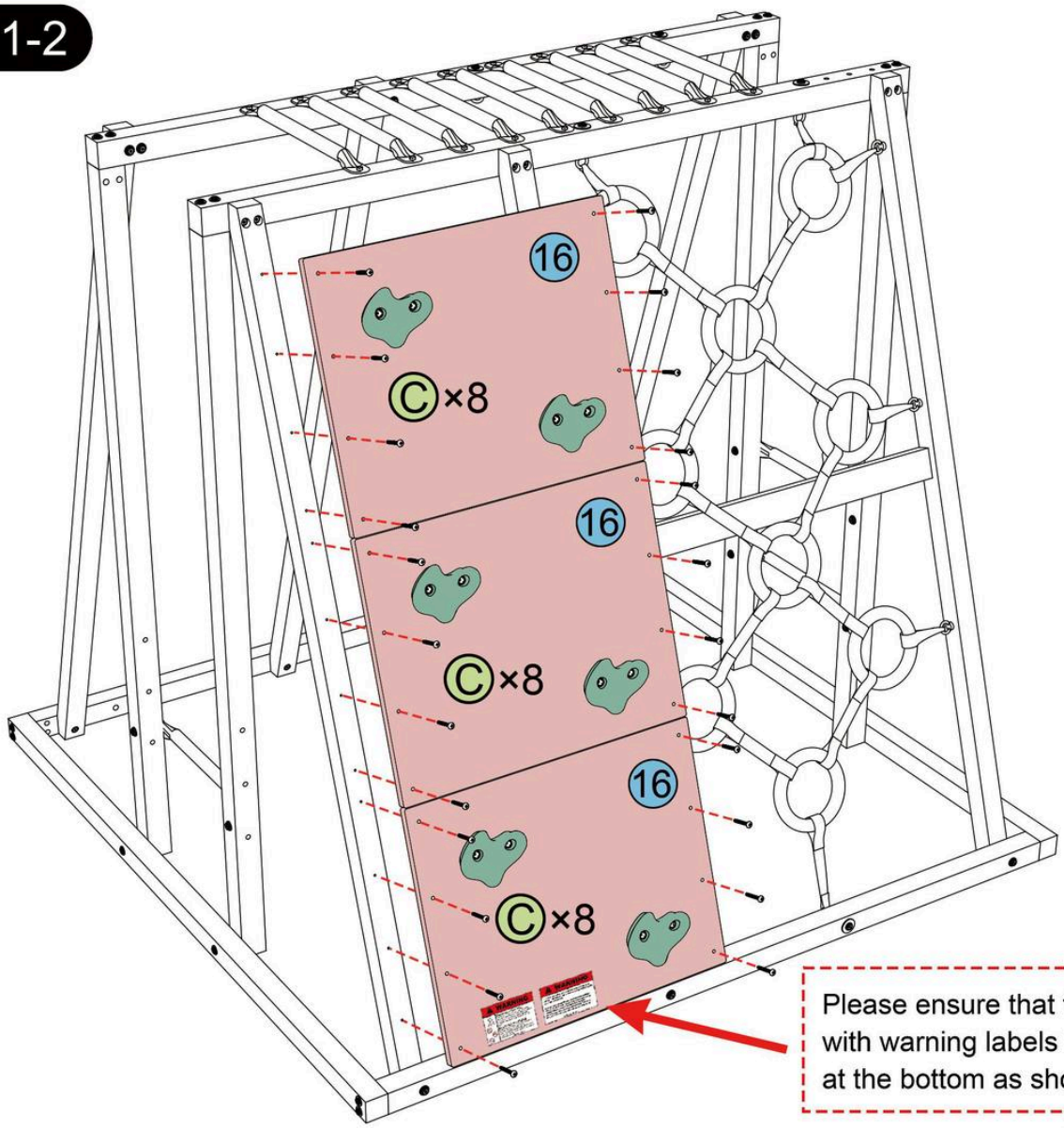

Please ensure that the 16 with warning labels is placed at the bottom as shown.

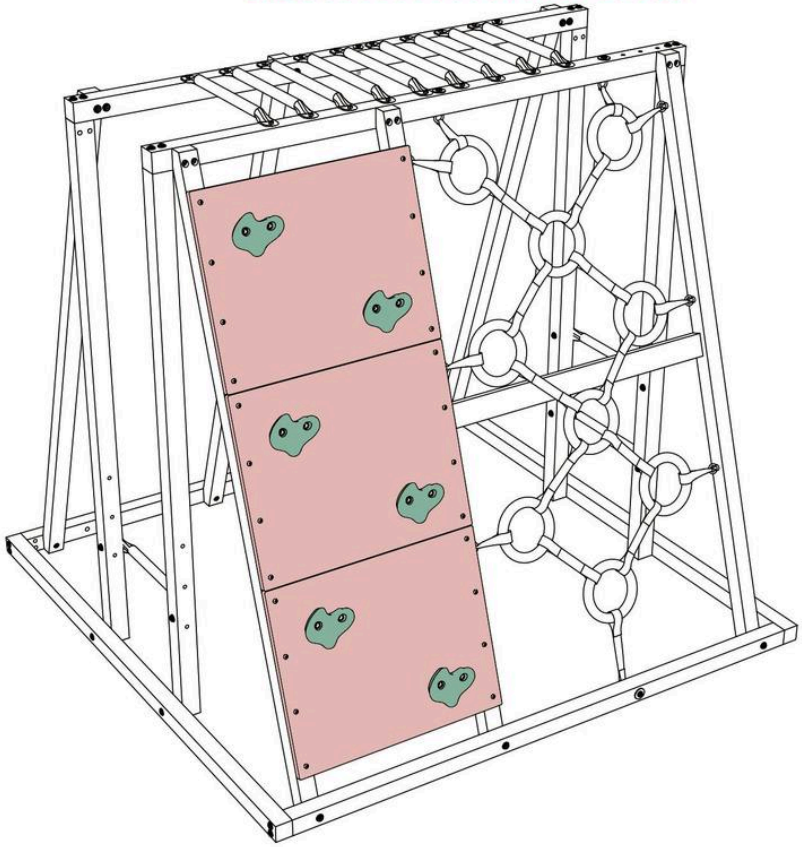

C	M5×45	24

12-1

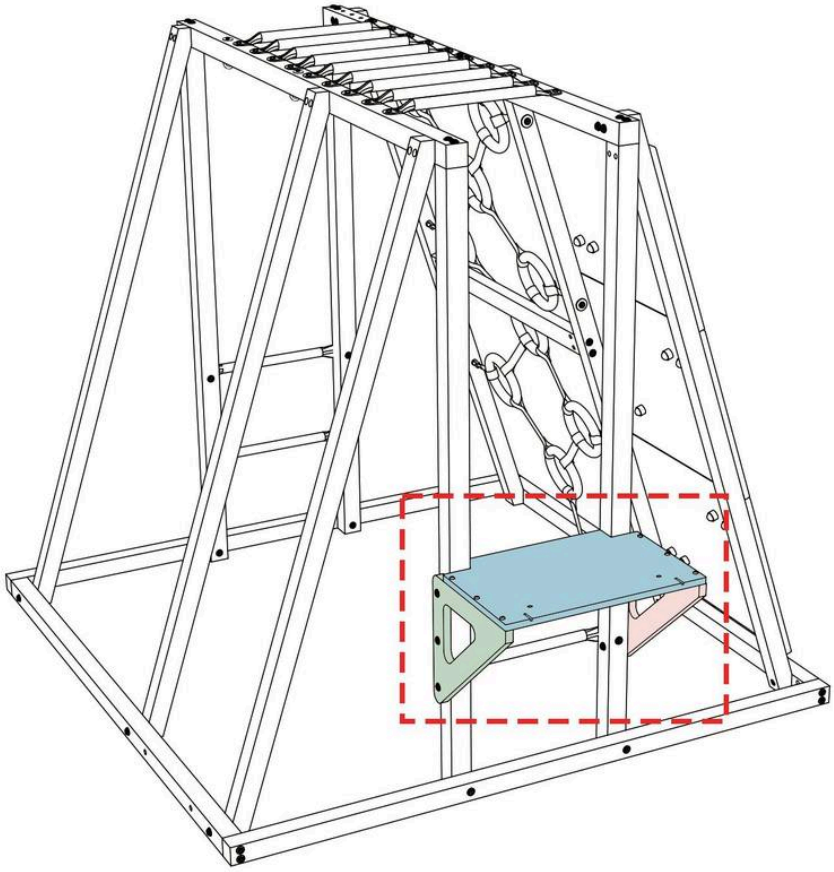

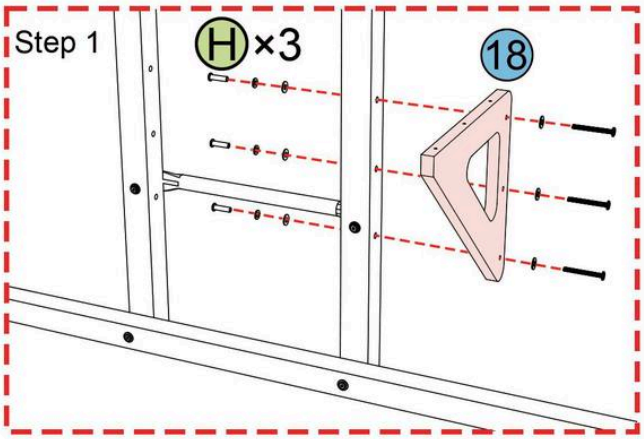

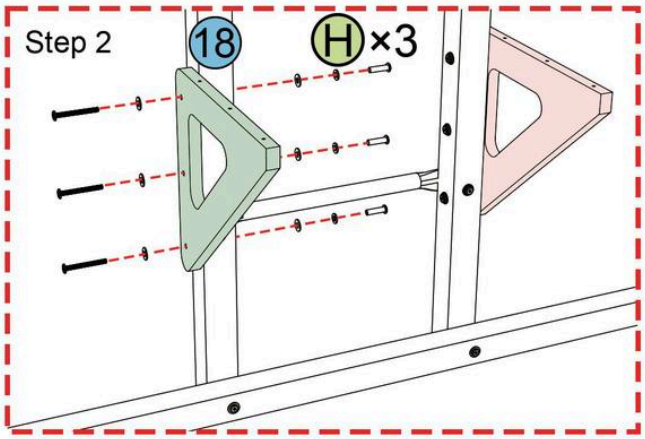

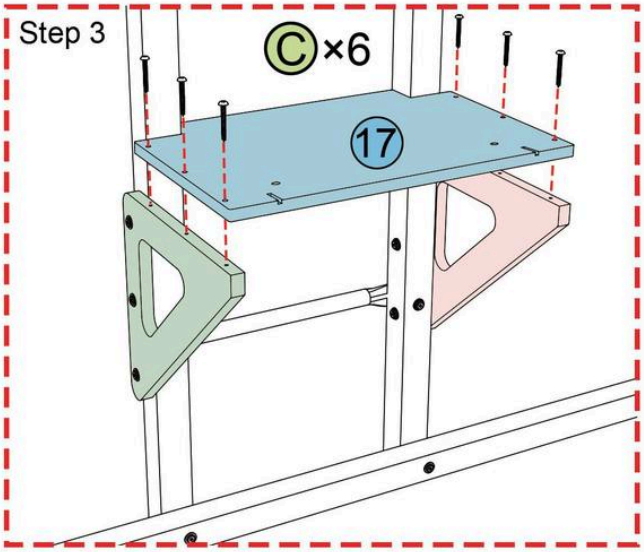

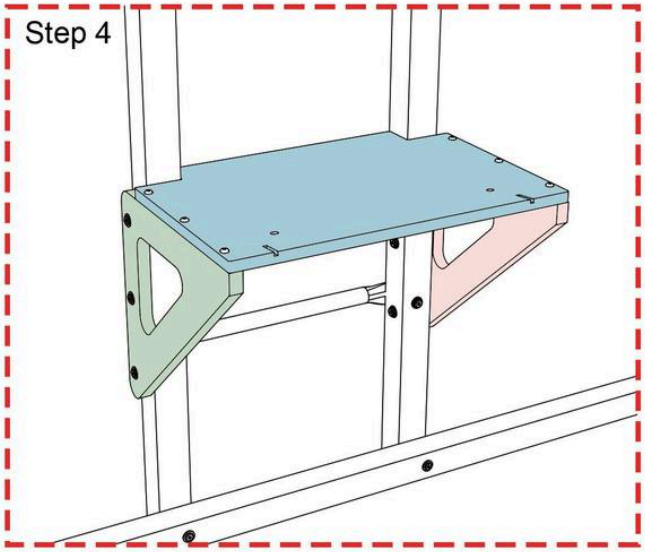

H	M6×60 M6×30	6
C	M5×45	6
T	4mm	2

13-1

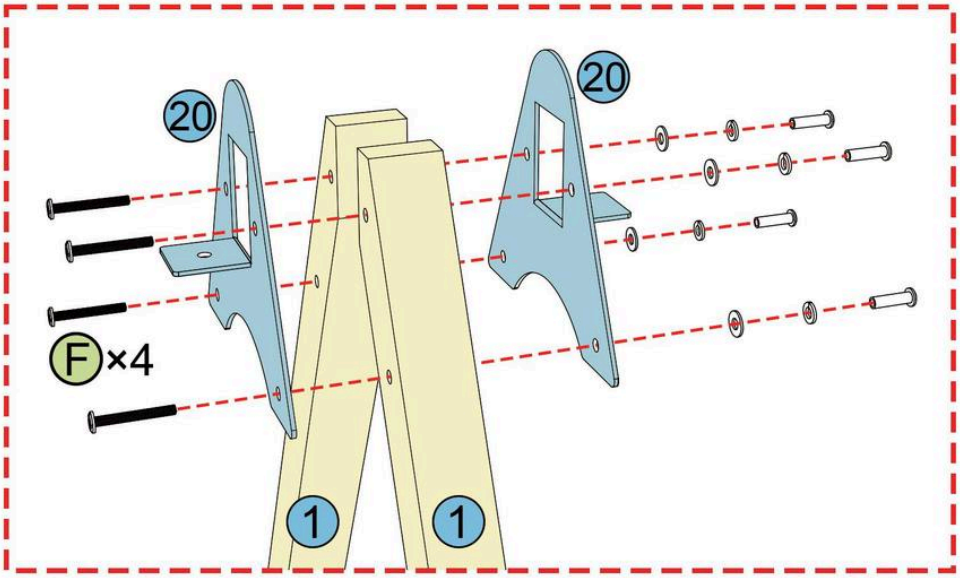

Screw on screws (F) loosely first, then tighten them after assembling Part (11) of Section 13-2

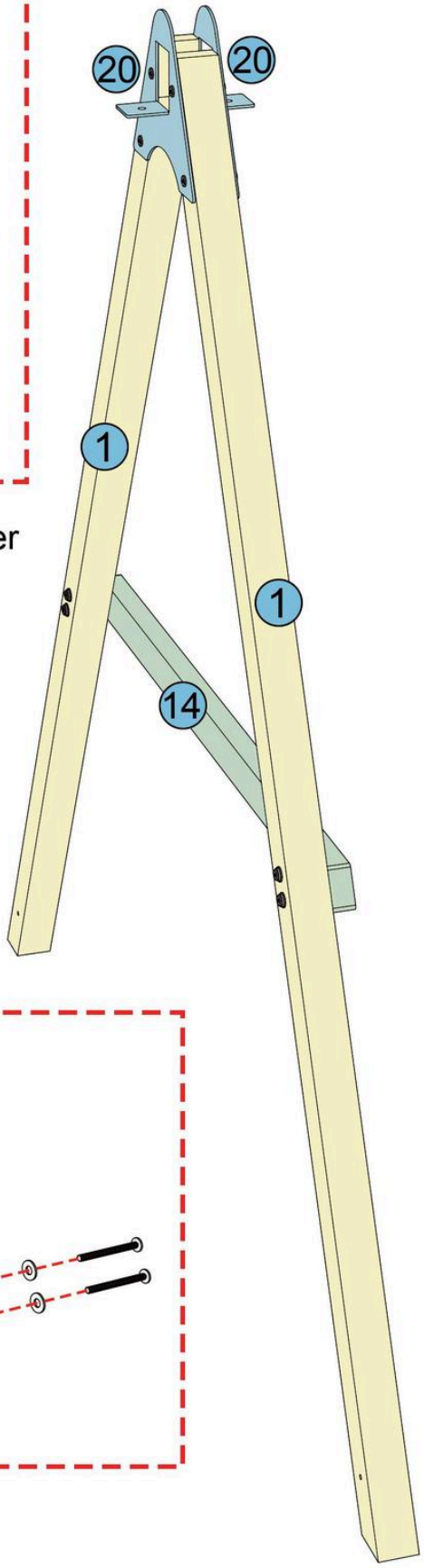

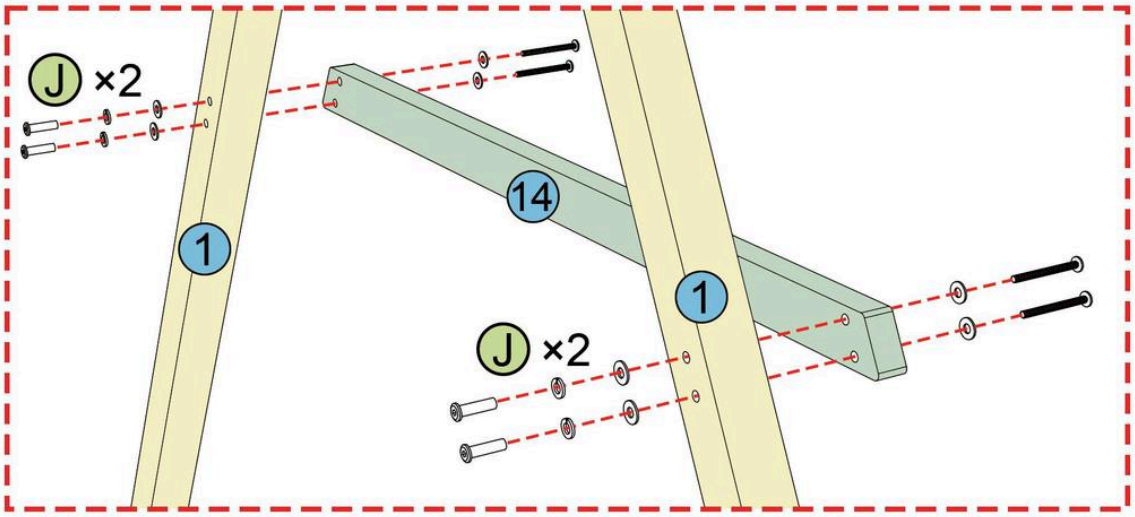

F	M6×50 M6×30	4
J	M6×70 M6×30	4
T	4mm	2

13-2

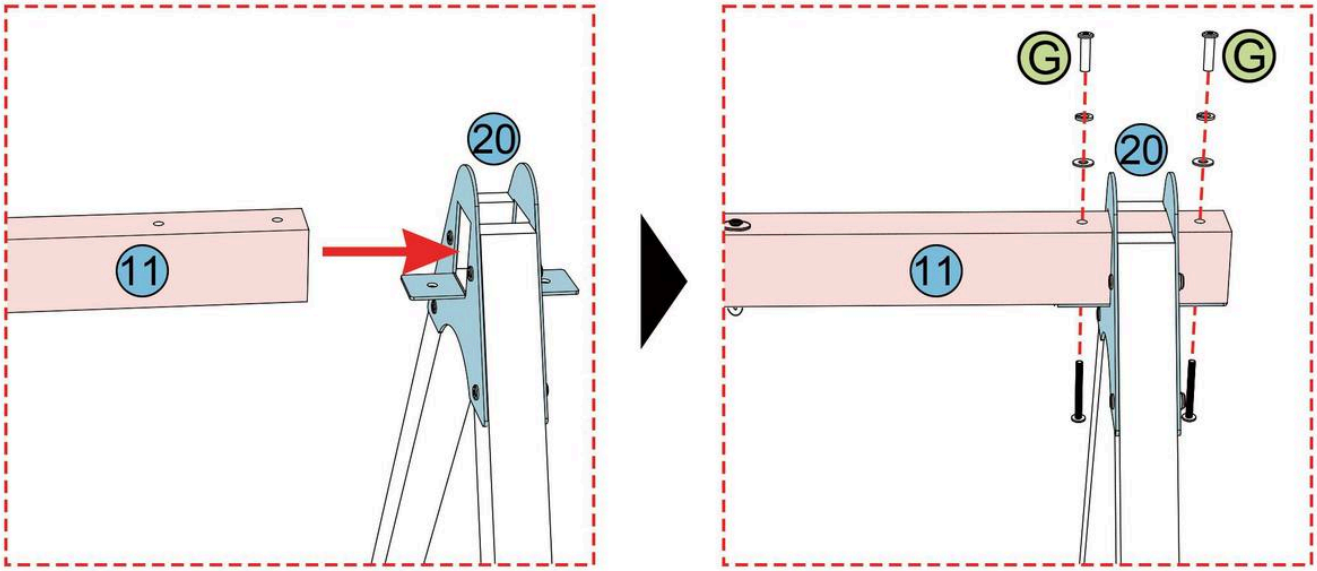

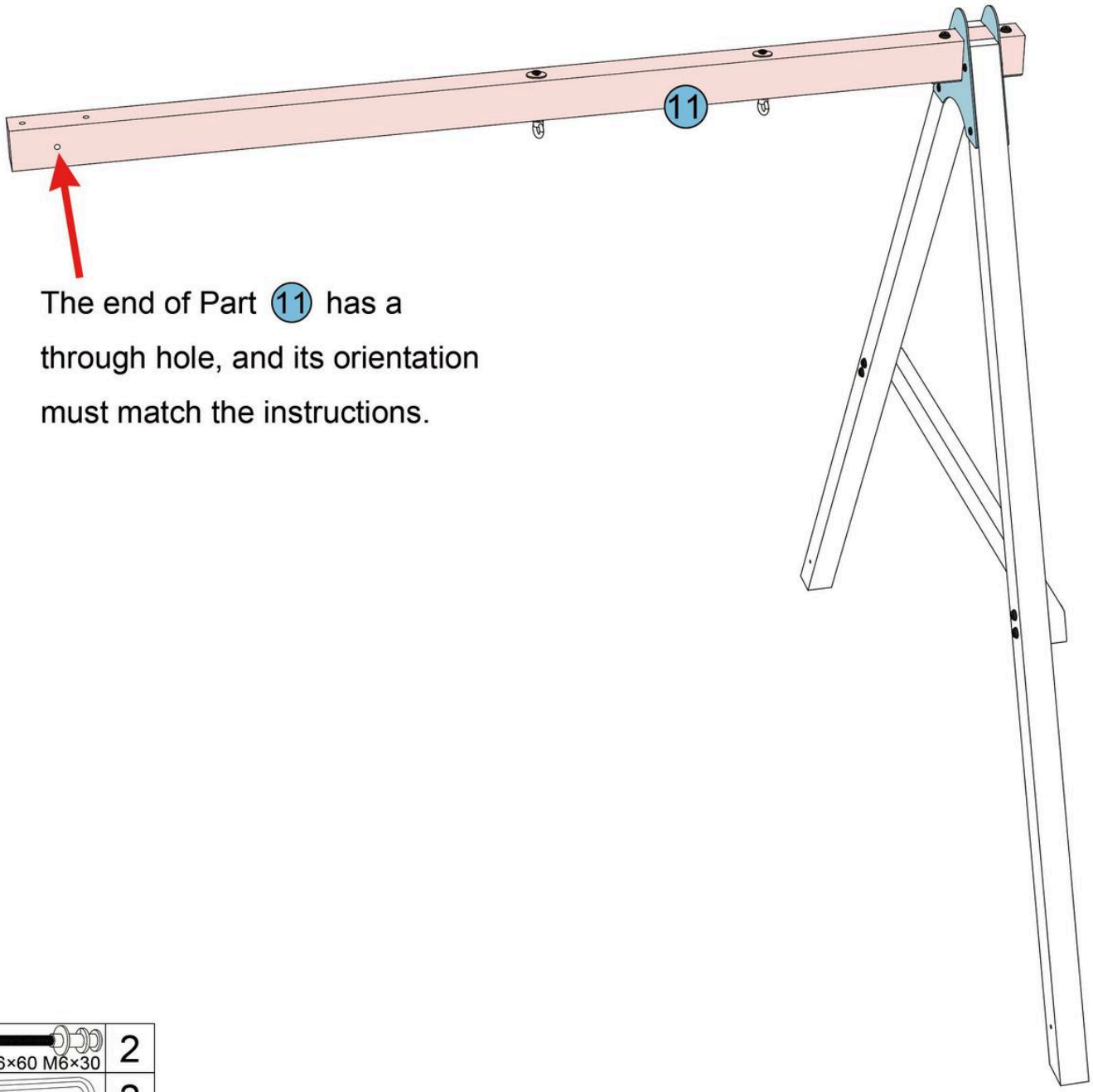

The end of Part 11 has a through hole, and its orientation must match the instructions.

G	M6×60 M6×30	2
T	4mm	2

13-3

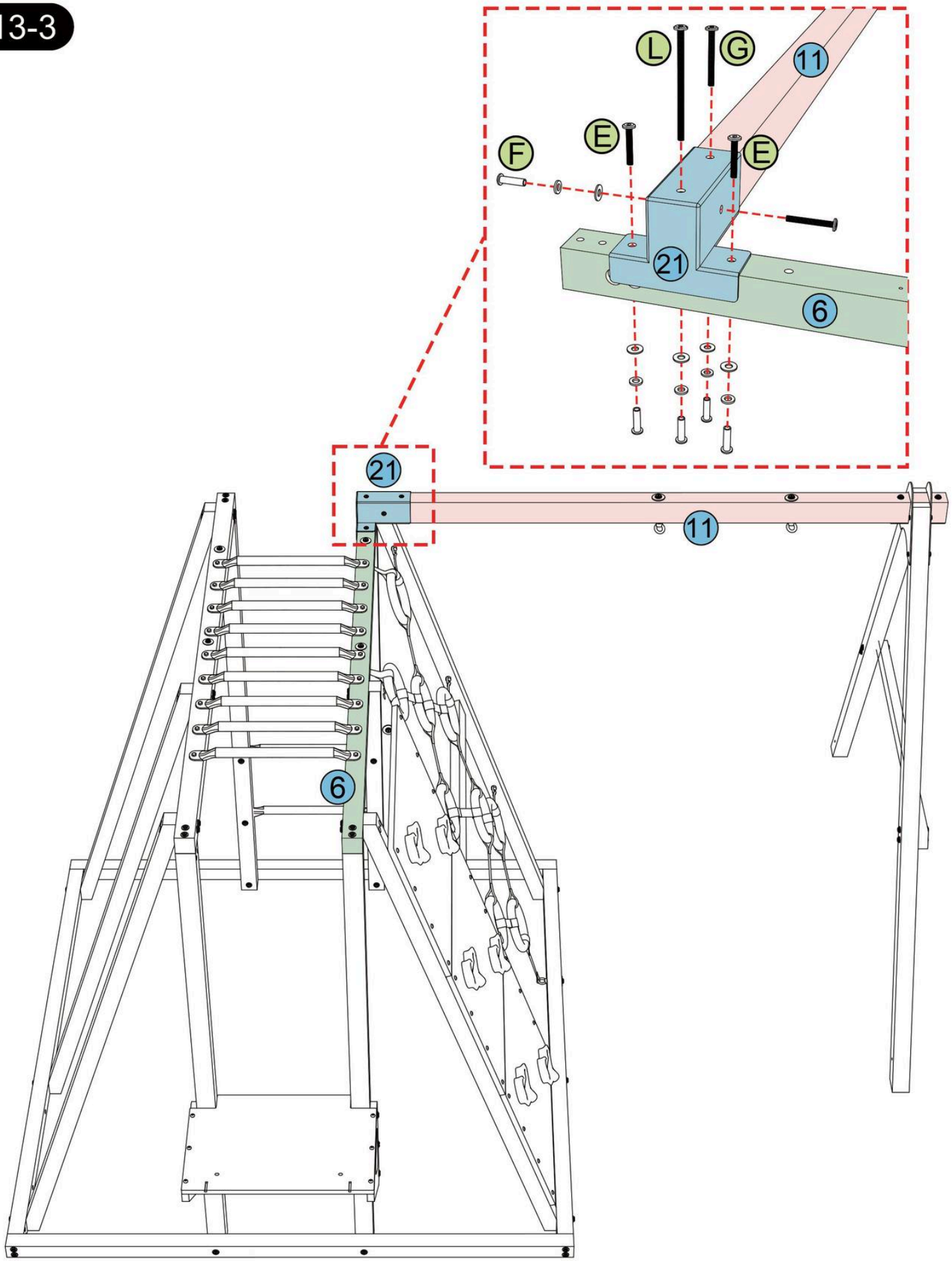

G	M6×60 M6×30	1
F	M6×50 M6×30	1
E	M6×40 M6×30	2
L	M6×110 M6×30	1
T	4mm	2

14-1

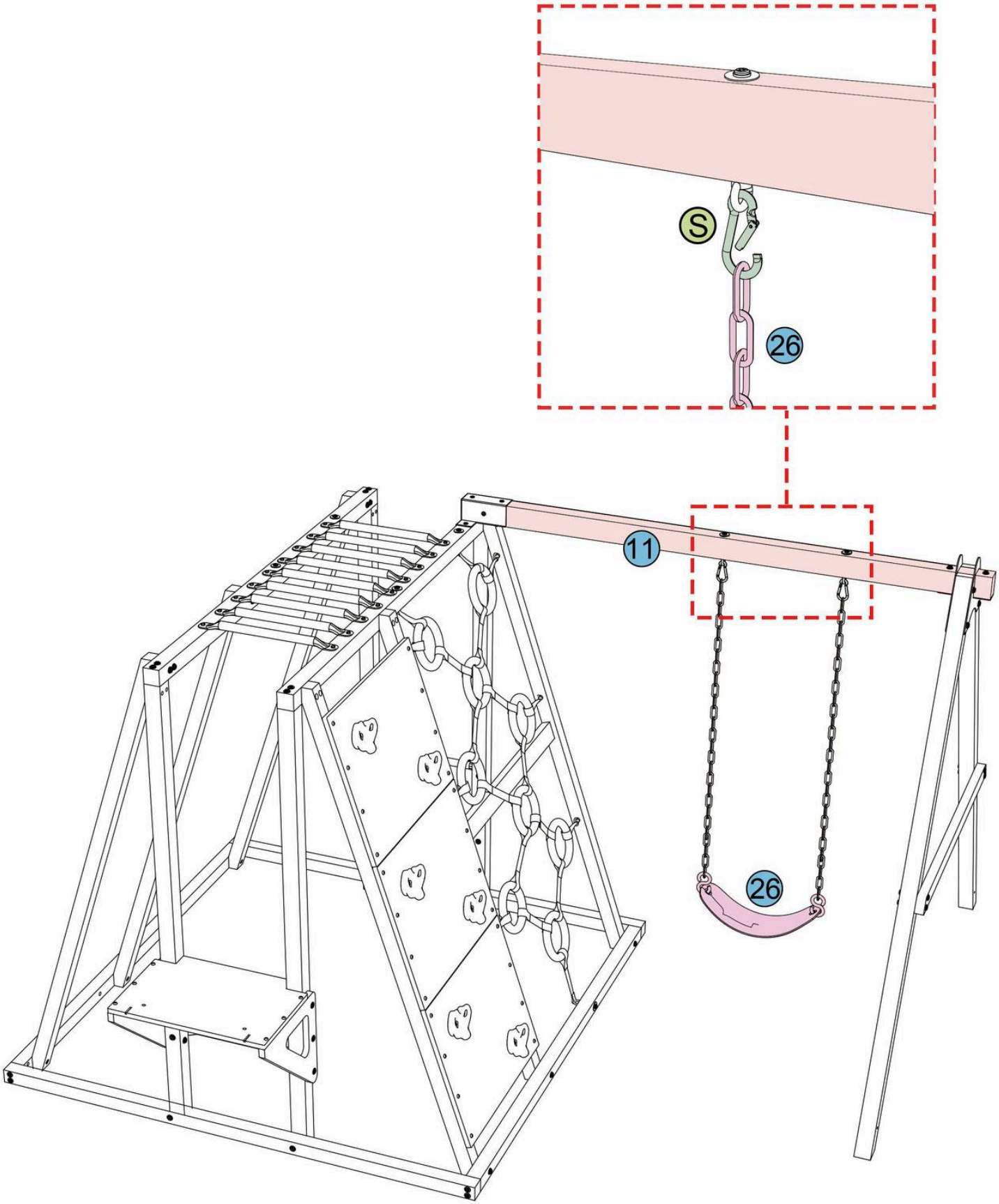

S		2

15-1

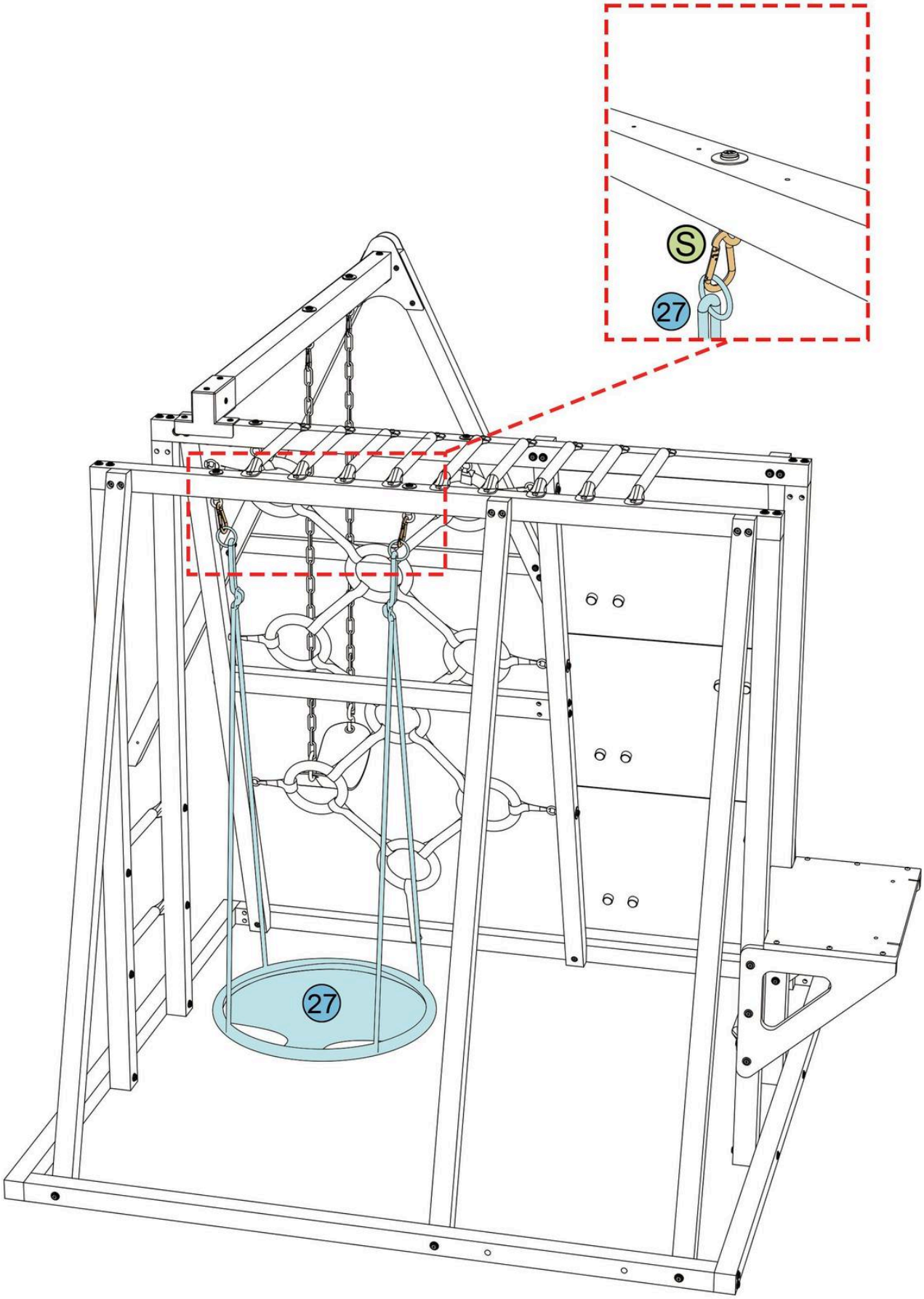

S	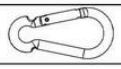	2

16-1

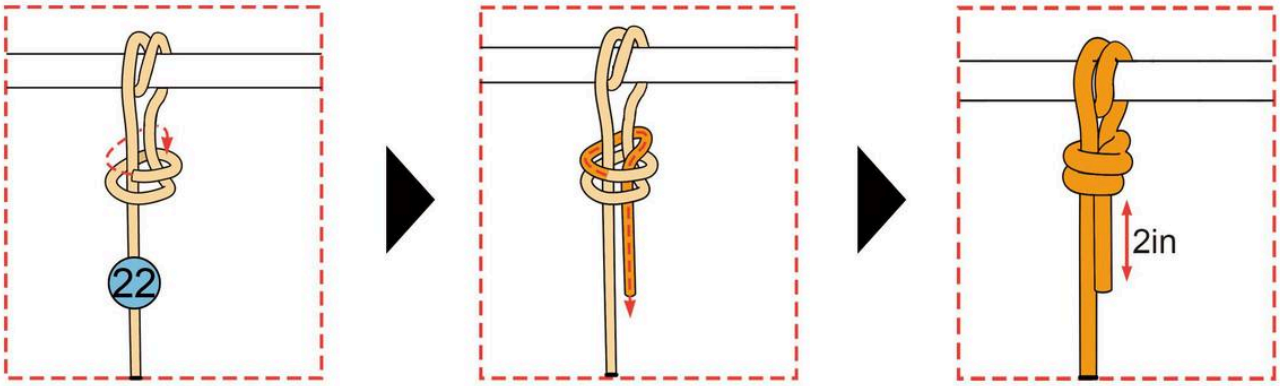

After tying the knot, the end of the rope sticking out should be 2 inches.

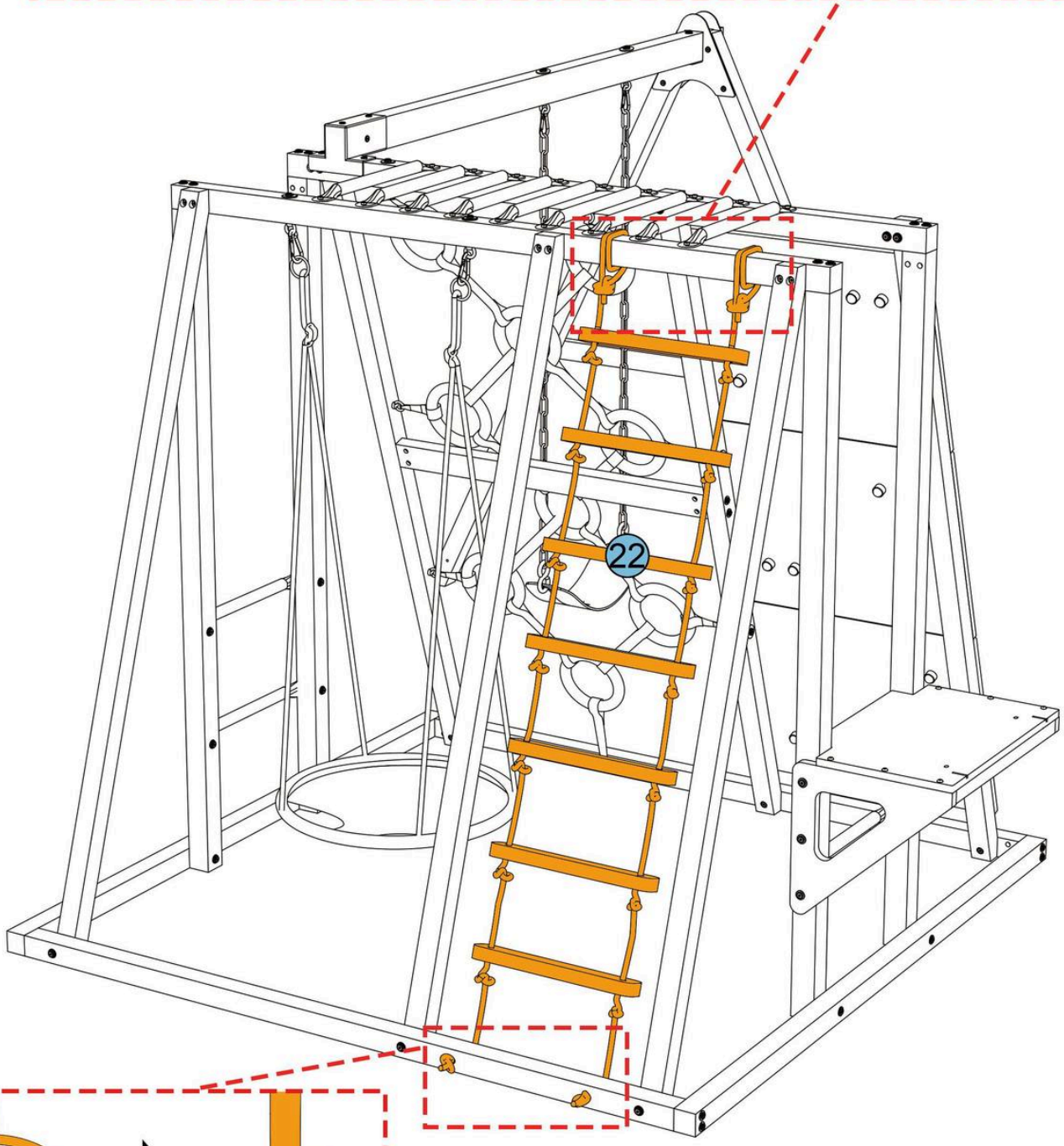

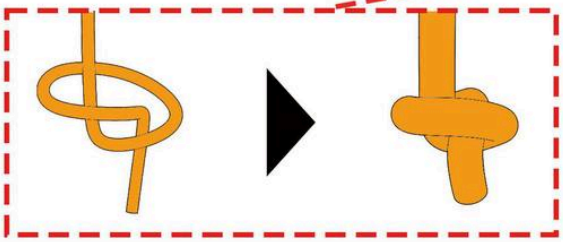

17-1

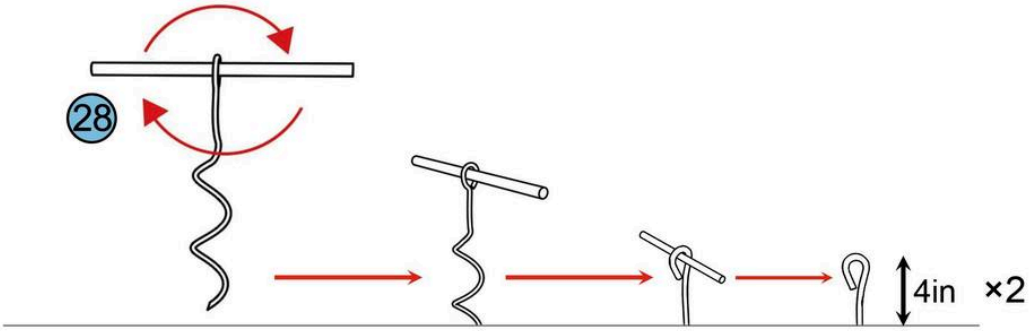

Installation: Screw Part 28 into the ground using a downward, clockwise motion. Stop when the highest point of the part reaches a height of 4 inches from the surface.

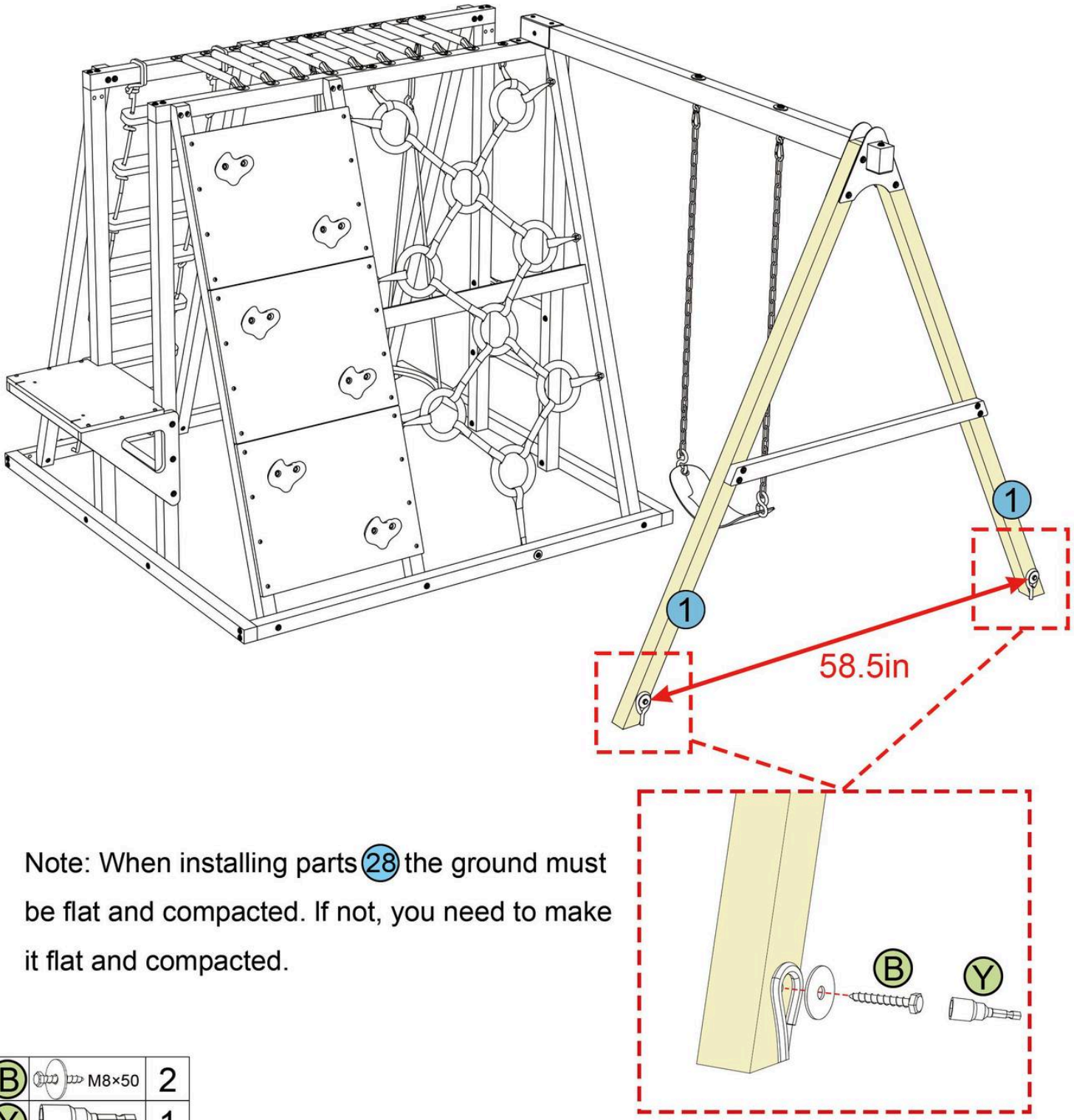

Note: When installing parts 28 the ground must be flat and compacted. If not, you need to make it flat and compacted.

B	M8×50	2
Y	13mm	1

18-1

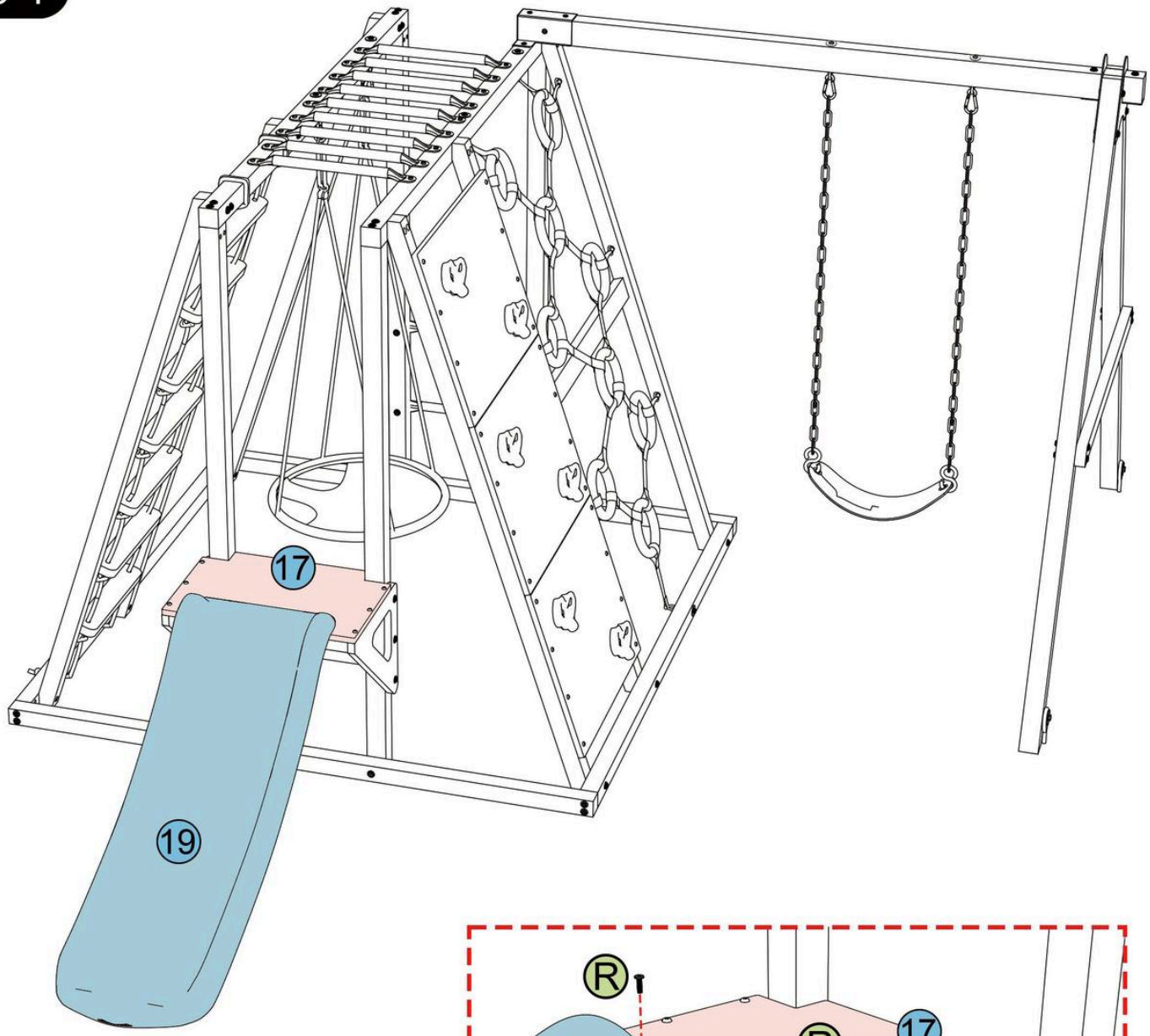

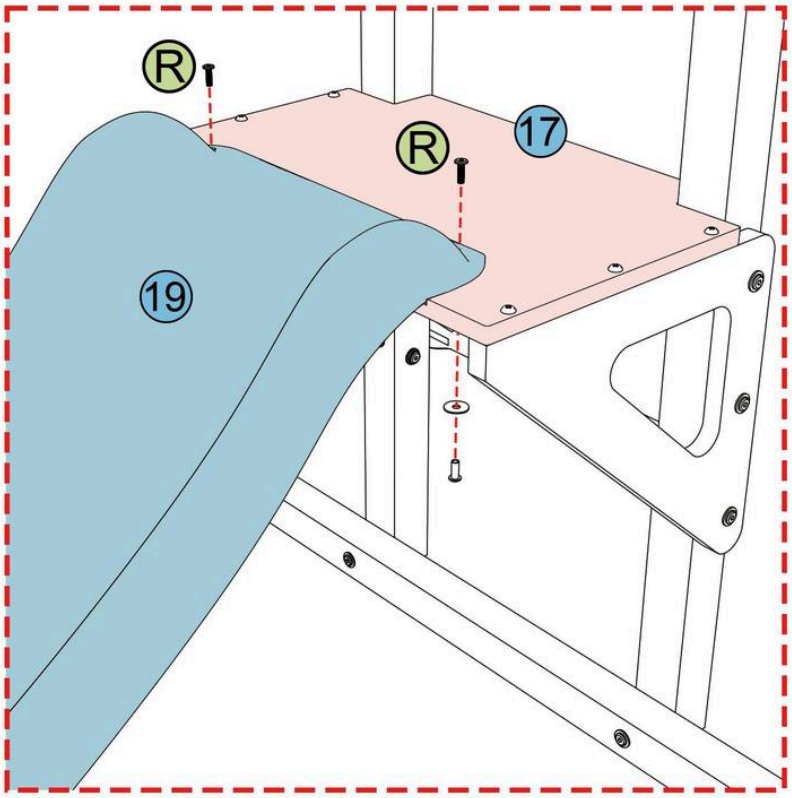

R	M5×16 M5×15	2
Z	3mm	2

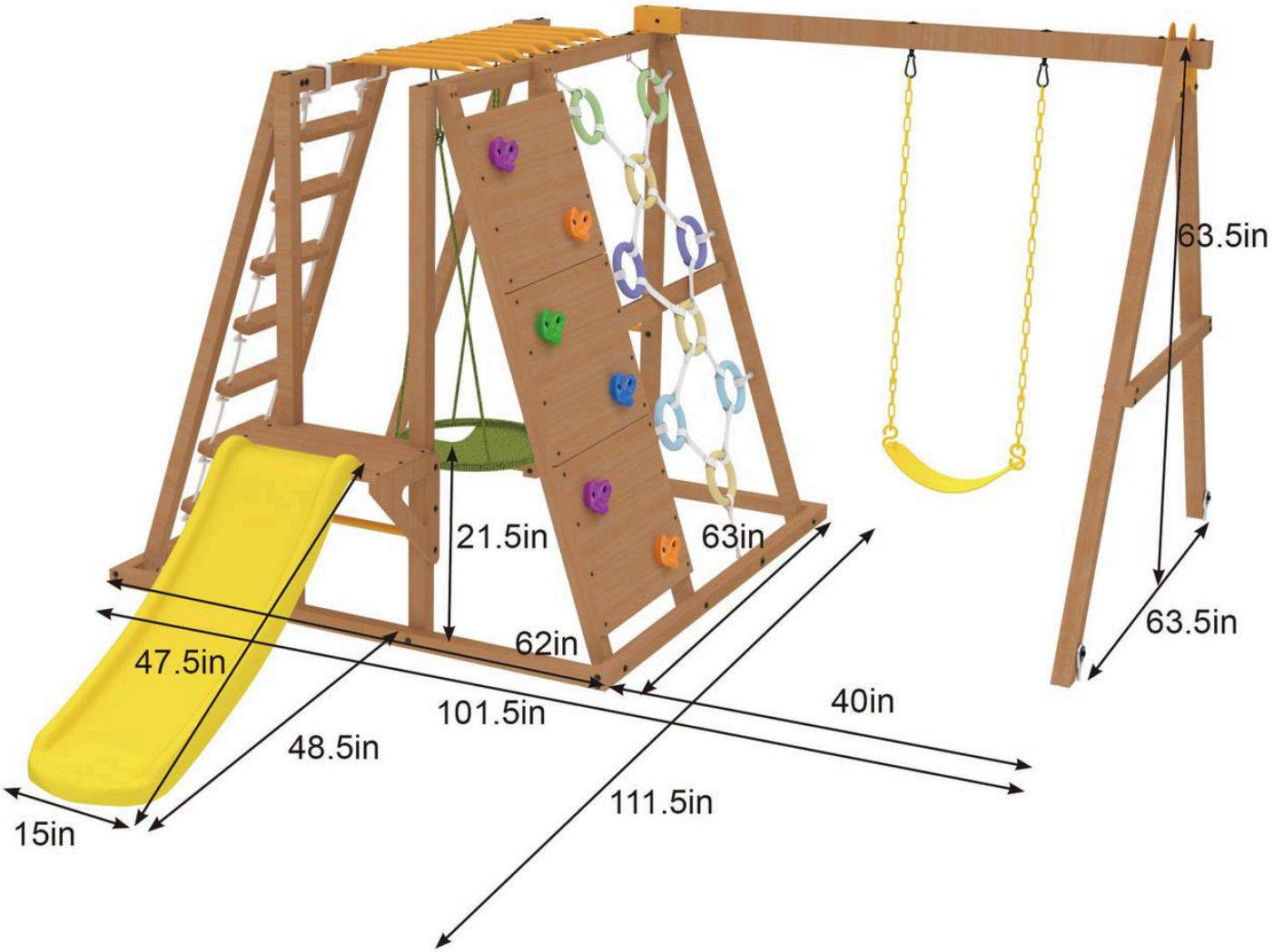
63.5in
21.5in
63in
63.5in
62in
47.5in
101.5in
40in
48.5in
111.5in
15in